HPG

HYPER POOL GROUP

Everything for your Dream Pool & Spa



Product Catalogue

RIAAN POOL Equipment
Reg No: CK 1996/008529/23
Everything for your Pool

HYPER POOL Equipment
EVERYTHING FOR YOUR POOL!

eartheco

AquaKing Pool Products

RIAAN POOL Equipment
Everything for your Pool

HYPER POOL Equipment
Everything for your Pool

INDEX

1 - FITTINGS

Description	Page
1. Fitting PVC	1 & 2
2. Fitting Poly	2 & 3
3. Reducers	4

2 - AIMFLOWS, UNION'S & VALVES

Description	Page
4. Aimflows & Spares	5
5. Unions	6 & 7
6. Ball Valves	7 & 8

3 - BOTTOM DRAINS

Description	Page
7. Bottom Drains	9

4 - PIPE

Description	Page
8. PVC Pipe	9
9. Poly Pipe	9

5 - SEALENTS

Description	Page
10.Hydro Seal & Flexi-Ment	10

6 - POOL PLASTERS

Description	Page
11. Weber	11
12. Cemcrete	12
13. AquaKing Dynamic	13
14. Cemcrete & Platinum Pool Paint	14 &15
15. Ceramic Mosaics	16

7 - FIBERGLASS & RESINS

Description	Page
16.Fiberglass, Matt & Resins Products.	17 to 22
17. Luxor Mosaics	23 & 24
18. Flexitile Mosaics	25 to 27
19. Standard Fiber Tissue Mosaics	28

8 - CHEMICALS

Description	Page
20. AquaKing & EcoGene Chemicals	29 to 31
21. PureSan Chemicals	31 & 32
22. Other Chemicals	33 to 34

9 - TESTING EQUIPMENT

Description	Page
23. Test Strips, Testing Indicators & Test Kits	35
24. Swimming Pool Thermometers	36

10 - CLEANING EQUIPMENT

Description	Page
25. Nets, Sweepers & Brushes	37 & 38
26. Aluminium Handles	38

11 - EQ PUMP & SPARES

Description	Page
27. EQ Pumps & EQ Self Draining Pumps	39
28. EQ Pump Spares	39 to 42
29. EQ Pump Exploded View	42
30. EQ Pump Cross Section	43
31. EQ Pump, Pump Curves	43

12 - RAPID PUMP & SPARES

Description	Page
32. Rapid Pumps & Rapid Self Draining Pumps	44
33. Rapid Pump Spares	44 to 47
34. Rapid Pump Exploded View	47
35. Rapid Pump Cross Section	48
36. Rapid Pump, Pump Curves	48

13 - PUMP & SPARES

Description	Page
37. Other Pumps Available	49
38. Pump Spares, Bearings	50
39. Pump Spares, Capasitors	51

14 - EQ FILTERS & SPARES

Description	Page
40. EQ Filters	52
41. EQ Filter Spares	52 to 54
42. EQ filter Exploded View	54

15 - COMBI & PUMP BOXES

Description	Page
43. Pump, Filter & Pump Box Combi Units	55
44. Pump Boxes	56

16 - EQ LIGHTS & SPARES

Description	Page
45. EQ LED Lights	57
46. EQ Aimflow Lights	57
47. Poolmaid Lights	58
48. Light Spares	58 to 60
49. Basic Light Installation	60

17 - ELECTRICAL

Description	Page
50. AquaKing DB Boxes	61
51. Electrical Spares & Timers	61 & 62

INDEX

18 - WEIRS & SPARES

Description	Page
52.EQ Weirs Gunite & Vinyl	63
53. Weir Spares	63 to 65
54. Weir Assembly (Exploded View)	65

19 - COLLINS

Description	Page
55. Collins MPV, Filter & Weir Spares	66 to 68

20 - AQUAKING POOL CLEANERS

Description	Page
56. AquaKing Xplorer	69
57. AquaKing Xplorer Spares	69
58. AquaKing Atlantis Pool Cleaner	70
59. Aquaking Atlantis Spares	70
60. Aquaking Turbo King	71
61. AquaKing Turbo King Spares	71
62. Universal Pool Cleaner Spares & Hoses	72 to 75

21 - AQUAKING CHLORINATOR

Description	Page
63. AquaKing Chlorinators	76
64. AquaKing Chlorinator Electrodes	76
65. AquaKing Chlorinator Spares	76

22 - AQUAKING HEAT PUMPS

Description	Page
66. AquaKing Heat Pumps	77
67. AquaKing Heat Pump Spares	77

23 - SOLAR & SPARES

Description	Page
68. Solar Panels	78
69. Solar Panel Spares	78 & 79
70. Solar Bubble Blankets	79
71. Roll Up Stations	79

24 - SPA

Description	Page
72. Spa Equipment & Spares	80 to 82

25 - SAND, SALT & FILTER MED

Description	Page
73. Swimming Pool Filter Sand 40kg	82
74. Koi Filter Sand 40kg	82
75. Filter Mediums, Eco-Fibre & Clino Brite, Fish	82

26 - POOLSKIM & GATOR

Description	Page
76. Poolskim	83
77. Poolskim Spares	83 & 84
78. Gator & Spares	84
79. Aquaking Leaf Gobbler & Spares	84

27 - ADHESIVES

Description	Page
80.Bailey, Tangit & Pattex Adhesives	85

28 - BRUSHES & ROLLERS

Description	Page
81. Brushes, Rollers & Roller Refills	86 & 87

29 - ACCESSORIES

Description	Page
82.Cutting Disc, Sanding Disc & Diamond Blades	87 & 88
83. PTFE Tape	88
84. Trowle's	88
85. Putty Knives	88
86. Silicone & Refille	89
87. Pratley Putties	89
88. Masking Tapes	89
89. Up The Pole & Chlorinator Basket	89 & 90
90. Pool Pilot & Pool Gobbler	90
91. Best Way Products & Spares	90
92. Swimming pool Toys & Acessories	90
93. Bestway, Bioguard, Dolphin, Emaux, HTH, Kreepy Krauly, Quality & Zodiac	91

30 - PRODUCT INFO

Description	Page
94. Index	93
95. AquaKing Atlantis	94
96. AquaKing Xplorer	95
97. Acrobat	96
98. Baracuda MX8	97 & 98
99.Baracuda MX6	99 & 100
100. Gemeni	101
101. Baracuda G2	102
102. Baracuda Pacer	103
103. Baracuda Genius	104
104. Kreepy Krauly Original	105
105. Kreepy Krauly Dominator	106
106. Kreepy Krauly Dominator Lite	107
107. Kreepy Krauly Hug Bug	108
108. Kreepy Krauly Bull Shark	109
110. Swimming Pool Layout	110
111. Wiring Diagram - All AvailableTimer's	111 to 116
112. Heat Pump Installation	117
113. Chlorinator Insallation	118
114. Solar Installation	119
115. Contact Details	120

RIAAN POOL Equipment
Everything for your Pool

CODES:
THE SAME FOR ALL BRANCHES

FITTINGS PVC



Description:
PVC 90 ELBOW GREY 50MM
Code:
(NO 13)

Description:
PVC 90 ELBOW WHITE 50MM
Code:
(NO 13A)

Description:
PVC 90 ELBOW GREY 50MM H/P
Code:
(NO 13AA)

Description:
PVC 90 ELBOW BLACK 50MM
Code:
(NO 13B)

Description:
PVC 90 ELBOW GREY 63MM H/P
Code:
(NO 13C)

Description:
PVC 90 ELBOW CONDUIT 20MM
Code:
(NO 13D)

Description:
PVC 90 ELBOW GREY 75MM H/P
Code:
(NO 13E)

Description:
PVC 90 ELBOW GREY 90MM H/P
Code:
(NO 13F)

Description:
PVC 90 ELBOW GREY 40MM H/P
Code:
(NO 13G)

Description:
PVC 90 ELBOW GREY 110MM H/P
Code:
(NO 13H)

Description:
PVC 90 ELBOW GREY 25MM H/P
Code:
(NO 13I)

Description:
PVC 90 ELBOW GREY 32MM
Code:
(NO 30)



Description:
PVC 45 ELBOW GREY 50MM
Code:
(NO 14)

Description:
PVC 45 ELBOW WHITE 50MM
Code:
(NO 14A)

Description:
PVC 45 ELBOW GREY 50MM H/P
Code:
(NO 14AA)

Description:
PVC 45 ELBOW BLACK 50MM
Code:
(NO 14B)

Description:
PVC 45 ELBOW GREY 63MM H/P
Code:
(NO 14C)

Description:
PVC 45 ELBOW CONDUIT 20MM
Code:
(NO 14D)

Description:
PVC 45 ELBOW GREY 75MM H/P
Code:
(NO 14E)

Description:
PVC 45 ELBOW GREY 90MM H/P
Code:
(NO 14F)

Description:
PVC 45 ELBOW GREY 40MM H/P
Code:
(NO 14G)

Description:
PVC 45 ELBOW GREY 25MM H/P
Code:
(NO 14H)

Description:
PVC 45 ELBOW GREY 32MM
Code:
(NO 31)



Description:
PVC 90 CONNECTOR GREY 50MM
Code:
(NO 15)

Description:
PVC 90 CONNECTOR WHITE 50MM
Code:
(NO 15A)

Description:
PVC 90 CONNECTOR GREY 50MM H/P
Code:
(NO 15AA)

Description:
PVC 90 CONNECTOR BLACK 50MM
Code:
(NO 15B)

Description:
PVC 90 CONNECTOR GREY 63MM H/P
Code:
(NO 15C)

Description:
PVC 90 CONNECTOR GREY 40MM
Code:
(NO 15D)

Description:
PVC 90 CONNECTOR GREY 75MM H/P
Code:
(NO 15E)

Description:
PVC 90 CONNECTOR GREY 90MM H/P
Code:
(NO 15F)

Description:
PVC 90 CONNECTOR CONDUIT 20MM
Code:
(NO 15G)

Description:
PVC 90 CONNECTOR GREY 110MM H/P
Code:
(NO 15H)

Description:
PVC 90 CONNECTOR GREY 25MM H/P
Code:
(NO 15I)

Description:
PVC CONNECTOR GREY 32MM
Code:
(NO 33)

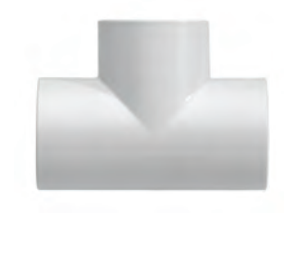

Description:
PVC 90 T-PIECE GREY 50MM
Code:
(NO 18)

Description:
PVC 90 T-PIECE WHITE 50MM
Code:
(NO 18A)

Description:
PVC 90 T-PIECE BLACK 50MM
Code:
(NO 18B)

Description:
PVC 90 T-PIECE BLACK 63MM H/P
Code:
(NO 18C)

Description:
PVC 90 T-PIECE GREY 40MM H/P
Code:
(NO 18D)

Description:
PVC 90 T-PIECE CONDUIT 20MM
Code:
(NO 18E)

Description:
PVC 90 T-PIECE GREY 25MM H/P
Code:
(NO 18F)

Description:
PVC 90 T-PIECE GREY 75MM H/P
Code:
(NO 18G)

Description:
PVC 90 T-PIECE GREY 50MM H/P
Code:
(NO 18H)

Description:
PVC 90 T-PIECE GREY 90MM H/P
Code:
(NO 18I)

Description:
PVC 90 T-PIECE GREY 110MM H/P
Code:
(NO 18J)

Description:
PVC T-PIECE GREY 32MM
Code:
(NO 32)

FITTINGS PVC

CODES:
THE SAME FOR ALL BRANCHES

HYPER POOL Equipment
Everything for your Pool



Description:
PVC MALE ADAPTOR 40MM THREAD 50 MM O/D
Code:
(NO16)



Description:
PVC FEMALE ADAPTOR 40MM THREAD 50 MM I/D
Code:
(NO 26)



Description:
PVC MALE ADAPTOR 50MM THREAD 50 MM O/D
Code:
(NO 17)



Description:
PVC FEMALE ADAPTOR 50MM THREAD 50 MM I/D
Code:
(NO 27)



Description:
PVC END CAP BLACK 50MM
Code:
(NO 21)

Description:
PVC END CAP WHITE 50MM
Code:
(NO 21A)

Description:
PVC END CAP GREY 50MM
Code:
(NO 21B)

Description:
PVC END CAP GREY 40MM H/P
Code:
(NO 21C)

Description:
PVC END CAP BLACK 63MM H/P
Code:
(NO 21D)

Description:
PVC END CAP CONDUIT 20MM
Code:
(NO 21E)

Description:
PVC ENDCAP GREY 25MM H/P
Code:
(NO 21G)

Description:
PVC END CAP GREY 32MM
Code:
(NO 34)



Description:
PVC 50MM GLUE POLY 50MM INSERT
Code:
(NO 20)



Description:
PVC 50MM GLUE POLY 40MM INSERT
Code:
(NO 19)



Description:
PVC TANK ADAPTOR 50MM O/D 40MM THREAD
Code:
(FS/05)



Description:
PVC FEMALE TANK ADAPTOR 40MM THREAD
Code:
(FS/06)



Description:
TANK ADAPTOR 40MM THREAD 50 MM O/D
Code:
(NO 28)



Description:
POLY 90 ELBOW COMBINATION
40MM
Code:
(NO 1)



Description:
POLY 90 ELBOW INSERT
40MM
Code:
(NO 2)



Description:
POLY CONNECTOR INSERT
40MM
Code:
(NO 3)



Description:
POLY MALE ADAPTOR
40MM
Code:
(NO 4)



Description:
POLY T-PIECE INSERT
40MM
Code:
(NO 5)



Description:
POLY T-PIECE COMBINATION
40MM
Code:
(NO 6)



Description:
POLY T-PIECE COMBINATION
50MM
Code:
(NO 06A)



Description:
POLY 90 ELBOW COMBINATION
50MM
Code:
(NO 9)



Description:
POLY 90 ELBOW INSERT
50MM
Code:
(NO 10)



Description:
POLY MALE ADAPTOR
50MM
Code:
(NO 11)



Description:
POLY CONNECTOR INSERT
50MM
Code:
(NO 12)

REDUCERS

CODES:
THE SAME FOR ALL BRANCHES

HYPER POOL Equipment
Everything for your Pool



Description:
PVC HOSE TAIL
20 MM
Code:
(20H/TAIL)

Description:
PVC HOSE TAIL
25 MM
Code:
(25H/TAIL)

Description:
PVC HOSE TAIL
32 MM
Code:
(N032H/TAIL)



Description:
POLY REDUCING CONNECTOR
50MM X 40 MM
Code:
(NO 7)

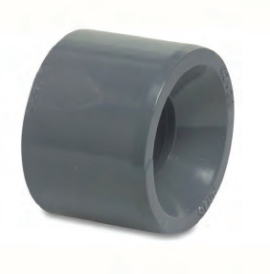

Description:
PVC REDUCING BUSH
50 MM X 32MM
Code:
(NO 50)

Description:
PVC REDUCING BUSH
110 MM X 63MM
Code:
(NO 50K)

Description:
PVC REDUCING BUSH
50 MM X 40MM
Code:
(NO 51)

Description:
PVC REDUCING BUSH
63 MM X 25MM
Code:
(NO 51A)

Description:
PVC REDUCING BUSH
90 MM X 63MM
Code:
(NO 51C)

Description:
PVC REDUCING BUSH
90 MM X 75MM
Code:
(NO 51D)

Description:
PVC REDUCING BUSH
40 MM X 25MM
Code:
(NO 51E)

Description:
PVC REDUCING BUSH
63 MM X 32MM
Code:
(NO 51F)

Description:
PVC REDUCING BUSH
63 MM X 40MM
Code:
(NO 51G)

Description:
PVC REDUCING BUSH
75 MM X 50MM
Code:
(NO 51H)

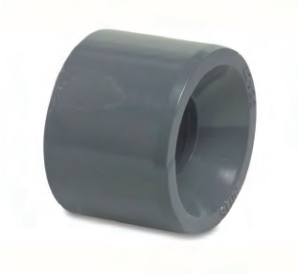

Description:
PVC REDUCING BUSH
90 MM X 50MM
Code:
(NO 51I)

Description:
PVC REDUCING BUSH
90 MM X 63MM
Code:
(NO 51J)

Description:
PVC REDUCING BUSH
50 MM X 20MM
Code:
(NO 52A)

Description:
PVC REDUCING SOCKET
50 MM X 25MM
Code:
(NO 52)

Description:
PVC REDUCING BUSH 40
MM X 32MM
Code:
(NO 53)

Description:
PVC REDUCING BUSH 25
MM X 20MM
Code:
(NO 54)

Description:
PVC REDUCING BUSH 40
MM X 20MM
Code:
(NO 55)

Description:
PVC REDUCING BUSH 40
MM X 15MM
Code:
(NO 55A)

Description:
PVC REDUCING BUSH 32
MM X 25MM
Code:
(NO 56)

Description:
PVC REDUCING BUSH 32
MM X 20MM
Code:
(NO 57)

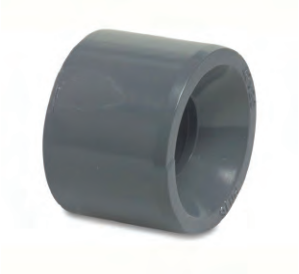

Description:
PVC REDUCING BUSH
63 MM X 75MM
Code:
(NO 58)

Description:
PVC REDUCING BUSH
25 MM X 16MM
Code:
(NO 59)

Description:
PVC REDUCING BUSH
63 MM X 50MM
Code:
(RED)

Description:
PVC REDUCING SOCKET
40 MM X 20MM
Code:
(RED20)



Description:
POLY REDUCING BUSH
50MM X 40 MM
Code:
(NO 8)



Description:
AIMFOW THREADED WHITE

Code:
(AIM/01)



Description:
AIMFLOW GLUED WHITE

Code:
(AIM/02)



Description:
AIMFLOW GLUED BLACK

Code:
(AIM/02E)



Description:
AIMFLOW POLY

Code:
(AIM/03)



Description:
AIMFLOW BALL INSERT

Code:
(AIM/05)



Description:
AIMFLOW FLANGE

Code:
(AIM/06)



Description:
AIMFLOW LINER GASKET

Code:
(AIM/07)



Description:
AIMFLOW NUTRING EQ

Code:
(AIM/08)



Description:
AIMFLOW NUTRING POOLQUIP

Code:
(AIM/08A)



Description:
AIMFLOW NUTRING QUALITY

Code:
(AIM/08B)



Description:
AIMFLOW INSERT ONLY

Code:
(AIM/09)



Description:
AIMFLOW SPRAY EYE BALL

Code:
(AIM/BALL)

UNIONS

CODES:
THE SAME FOR ALL BRANCHES



Description:
UNION 20MM PVC

Code:
(UNION/20)

Description:
UNION 25MM PVC

Code:
(UNION/25)

Description:
UNION 32MM PVC

Code:
(UNION/32)

Description:
UNION 75MM PVC

Code:
(UNION/75)

Description:
UNION 63MM PVC

Code:
(UNION/N)



Description:
UNION COLLINS

Code:
(UNION)



Description:
UNION COLLINS LOCKING NUT

Code:
(UNION/CLN)



Description:
UNION END 50MM HYDRO/ GALAXY 0.6KW & 0.75KW
Code:
(UNION/B)



Description:
UNION END 63MM HYDRO/ GALAXY 1,1KW & 1,5KW

Code:
(UNION/E63)



Description:
UNION END 50MM NEW SPA & MAGIC PUMPS

Code:
(UNION/END)



Description:
UNION LOCKING NUT 63MM & 50MM HYDRO/GALAXY

Code:
(UNION/LN)



Description:
UNION WHITE 40MM T/T

Code:
(UNION/F)



Description:
UNION BLACK 50MM EQ

Code:
(UNION/QBE)



Description:
UNION WHITE 50MM EQ

Code:
(UNION/QW)



Description:
UNION PUMP EQ BLACK

Code:
(UNION1)

UNIONS

CODES:
THE SAME FOR ALL BRANCHES



Description:
UNION 50MM SWIMQUIP

Code:
(UNION/S)



Description:
UNION 40MM SWIMQUIP

Code:
(UNION/S1)

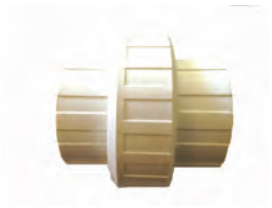

Description:
UNION 50MM IMPORTED

Code:
(UNION/S0)



Description:
UNION 50MM X 1½" PORPOISE DELIVERY SIDE
Code:
(UNION/SU)



Description:
UNION 50MM X 2" PORPOISE SUCTION SIDE
Code:
(UNION/SU1)



Description:
UNION TURBON FLOW

Code:
(UNION/TF)



Description:
UNION O-RING COLLINS

Code:
(UNION/02)



Description:
UNION O-RING 50MM & 63MM HYDRO/GALAXY
Code:
(UNION/S01)

BALL VALVES



Description:
(2)TWO WAY VALVE IMPORT

Code:
(BV/2W)



Description:
(3) WAY VALVE IMPORT

Code:
(BV/3W)



Description:
NON RETURN 63MM IMPORT

Code:
(BV/NRI)

BALL VALVES

CODES:
THE SAME FOR ALL BRANCHES

HYPER POOL Equipment
Everything for your Pool



Description:
BALL VALVE PVC 20MM

Code:
(BV/20)

Description:
BALL VALVE PVC 25MM

Code:
(BV/25)

Description:
BALL VALVE PVC 32MM

Code:
(BV/32)

Description:
BALL VALVE PVC 40MM

Code:
(BV/04)

Description:
BALL VALVE PVC 50MM
Code:
(BV/01A)

Description:
BALL VALVE PVC 63MM
Code:
(BV/03)

Description:
BALL VALVE PVC 75MM
Code:
(BV/02)



Description:
BALL VALVE PVC 63MM SINGLE UNION
Code:
(BV/03A)



Description:
NON RETURN 50MM SPRING LOADED
Code:
(BV/05)



Description:
BALL VALVE 50MM BRASS CHECK VALVE
Code:
(BV/05A)



Description:
BALL VALVE BRASS SWING VALVE

Code:
(BV/06)



Description:
BALL VALVE PVC 50 MM SINGLE UNION
Code:
(BV/07)



Description:
FLAPPER CHECK VALVE

Code:
(BV/F)



Description:
BALL VALVE 63MM NON RETURN
Code:
(BV/N)

RIAAN POOL Equipment
Everything for your Pool

CODES:
THE SAME FOR ALL BRANCHES

BOTTOM BRAINS



Description:
BOTTOM DRAIN AND GRID
QUALITY
Code:
(SLB/D)



Description:
BOTTOM DRAIN GRID
SWIMLINE
Code:
(SLB/G)



Description:
BOTTOM DRAIN AND GRID
IMPORT
Code:
(SLB/GDG)



Description:
HYDROSTATIC VALVE

Code:
(SLH/DRO)

PVC PIPE



Description:
PVC PIPE WHITE 25MM S.A.B.S

Code:
(PVC25)

Description:
PVC PIPE WHITE 32MM S.A.B.S

Code:
(PVC1)

Description:
PVC PIPE WHITE 40MM S.A.B.S

Code:
(PVC40)

Description:
PVC PIPE WHITE 50MM S.A.B.S

Code:
(PVC)



Description:
PVC PIPE BLUE 50MM

Code:
(PVC2)

Description:
PVC PIPE 63MM CL9 DURAFLOW

Code:
(PVC4)

Description:
PVC PIPE 75MM CL9 DURAFLOW

Code:
(PVC6A)

Description:
PVC PIPE 90MM CL9 DURAFLOW

Code:
(PVC7)



Description:
PVC PIPE BLACK 50MM

Code:
(PVC/B)

NOTE !!

IF PIPE, OTHER THAN WHAT IS MENTIONED IS REQUIRED, PLEASE SPEAK TO YOUR LOCAL SALES CONSULTANT TO GET PRICING AND AVAILABILITY

POLY PIPE



Description:
POLY PIPE 40MM CL3

Code:
(40C3)

Description:
POLY PIPE 40MM CL6

Code:
(40C6)

Description:
POLY PIPE 50MM CL3

Code:
(50C3)

Description:
POLY PIPE 50MM CL6

Code:
(50C6)

HYDRO SEAL
FLEXI-MENT

CODES:
THE SAME FOR ALL BRANCHES

HYPER POOL Equipment
Everything for your Pool



Description:
HYDROSTOP 1KG

Code:
(HYDRO)

Description:
HYDRO SEAL ALMOST WHITE
BUCKET 25KG
Code:
(HYDRO/AW)

Description:
HYDRO SEAL MARBLE CHARCOAL
2KG
Code:
(HYDRO/MC)

Description:
HYDRO SEAL PLAST
2KG
Code:
(HYDRO/P)

Description:
HYDRO SEAL MARBLE CHARCOAL
25KG
Code:
(HYDRO/S)

Description:
HYDRO SEAL MARBLE WHITE
12,5KG
Code:
(HYDRO/S1)

Description:
HYDRO SEAL MARBLE CHARCOAL
12.5KG
Code:
(HYDRO/S2)

Description:
HYDRO SEAL MARBLE WHITE
25KG
Code:
(HYDRO/S3)

Description:
HYDRO SEAL BOND
3LT
Code:
(HYDRO/SB)

Description:
HYDRO SEAL CHARCOAL
12,5KG
Code:
(HYDRO/SC)

Description:
HYDRO SEAL CHARCOAL
25KG
Code:
(HYDRO/S)

Description:
HYDRO SEAL GREY
25KG
Code:
(HYDRO/G)

Description:
HYDRO SEAL MID BROWN
2KG
Code:
(HYDRO/SK)

Description:
HYDRO SEAL MIX & FIX
25KG
Code:
(HYDRO/SM)

Description:
HYDRO SEAL MIX & FIX
2KG
Code:
(HYDRO/SMF)

Description:
HYDRO SEAL PLAST BUCKET
25KG
Code:
CAT04/0016 (HYDRO/SP)

Description:
HYDRO SEAL SAND STONE
2KG
Code:
CAT04/0017 (HYDRO/SS2)

Description:
HYDRO SEAL SAN LAMEER
2KG
Code:
(HYDRO/SSL)

Description:
HYDRO SEAL TERRECOTTA
2KG
Code:
(HYDRO/TER2)

Description:
HYDRO CLEAR SEAL
1LT
Code:
(HYDRO/CS)



Description:
FLEXI-MENT
1KG (2 PART)
Code:
(FLEXI)

Description:
FLEXI-MENT
1KG (1 PART)
Code:
(FLEXI/1)

www.hyperpoolgroup.co.za

Description:
WEBER POOL PAINT
WHITE
Code:
(WEBBER/PP)



Description:
WEBER POOL PAINT
LIGHT BLUE
Code:
(WEBBER/PP)

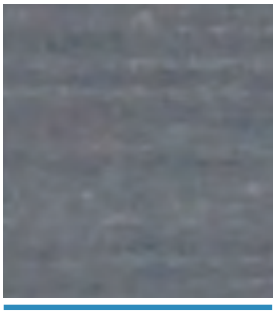

Description:
WEBER POOL PAINT
SLATE
Code:
(WEBBER/PP)



Description:
WEBER MARBELITE
MIDNIGHT BLUE
Code:
(WEBBER/B)



Description:
WEBER MARBELITE
SLATE
Code:
(WEBBER/S)



Description:
WEBER MARBELITE
POWDER BLUE
Code:
(WEBBER/SB)



Description:
WEBER MARBELITE
SKY BLUE
Code:
(WEBBER/SKYB)

Description:
WEBER MARBELITE
WHITE
Code:
(WEBBER/W)



Description:
S A MARBELITE
SUPERIOR WHITE
Code:
(SAM/W)

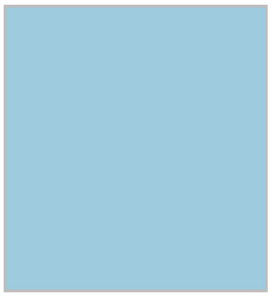

Description:
S A MARBELITE
SKY BLUE
Code:
(SAM/B)

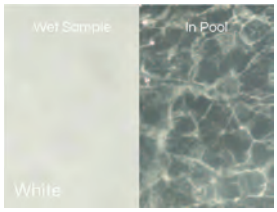

Description:
CEMCRETE POOLCRETE
WHITE
Code:
(CEM)

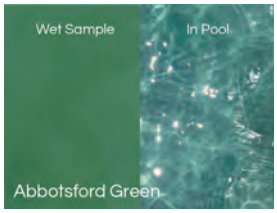

Description:
CEMCRETE POOLCRETE
ABBOTSFORD GREEN
Code:
(CEM/AG)

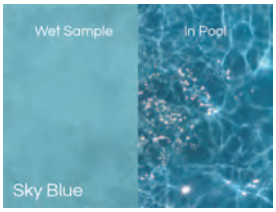

Description:
CEMCRETE POOLCRETE
SKY BLUE
Code:
(CEM/B)

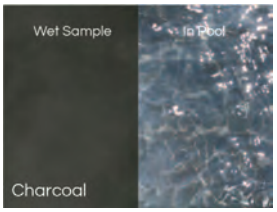

Description:
CEMCRETE POOLCRETE
CHARCOAL
Code:
(CEM/CH)

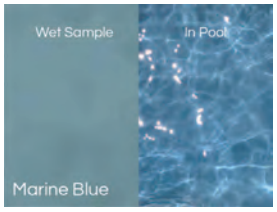

Description:
CEMCRETE POOLCRETE
MARINE BLUE
Code:
(CEM/M)

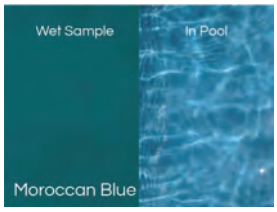

Description:
CEMCRETE POOLCRETE
MOROCCAN BLUE
Code:
(CEM/M1)

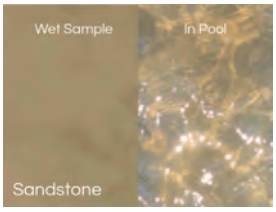

Description:
CEMCRETE POOLCRETE
SANDSTONE
Code:
(CEM/P)

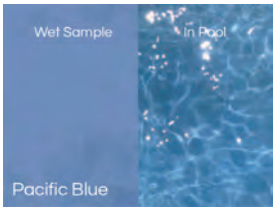

Description:
CEMCRETE POOLCRETE
PACIFIC BLUE
Code:
(CEM/PA)

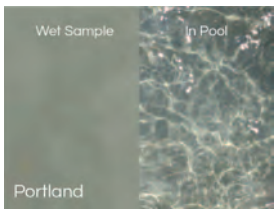

Description:
CEMCRETE POOLCRETE
PORTLAND GREY
Code:
(CEM/PG)

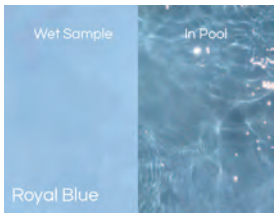

Description:
CEMCRETE POOLCRETE
ROYAL BLUE
Code:
(CEM/RB)

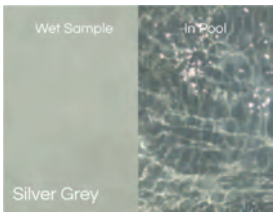

Description:
CEMCRETE POOLCRETE
SILVER GREY
Code:
(CEM/SG)

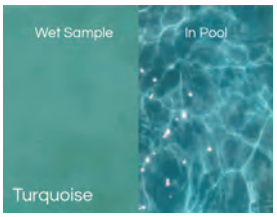

Description:
CEMCRETE POOLCRETE
TURQUOISE
Code:
(CEM/T)



Description:
AQUAKING DYNAMIC MARBELITE
WHITE
Code:
CAT05/041

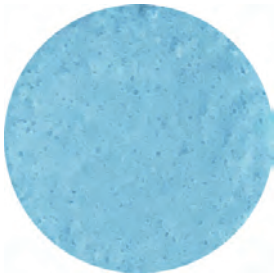

Description:
AQUAKING DYNAMIC MARBELITE
SKY BLUE
Code:
CAT05/042



Description:
AQUAKING DYNAMIC MARBELITE
DEEP BLUE
Code:
CAT05/043



Description:
AQUAKING DYNAMIC MARBELITE
DARK BLUE
Code:
CAT05/044



Description:
AQUAKING DYNAMIC MARBELITE
MIDNIGHT BLUE
Code:
CAT05/045



Description:
AQUAKING DYNAMIC MARBELITE
TURQUOISE
Code:
CAT05/046



Description:
AQUAKING DYNAMIC MARBELITE
SAND STONE
Code:
CAT05/047

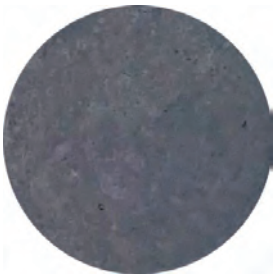

Description:
AQUAKING DYNAMIC MARBELITE
GREY
Code:
CAT05/048

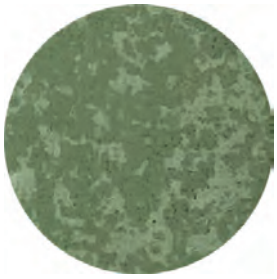

Description:
AQUAKING DYNAMIC MARBELITE
EMERALD GREEN
Code:
CAT05/049



Description:
AQUAKING DYNAMIC MARBELITE
BLACK
Code:
CAT05/050

NOTE !

WITH ALL THE MARBELITE PRODUCTS, WEBER, CEMCRETE AND AQUAKING DYNAMIC MARBELITE, THE COLOURS USED IN THE PRINTING PROCESS MAY VARY FROM THE ACTUAL COLOUR OF THE END PRODUCT, FOR TRUE COLOUR REPRESENTATION PLEASE REFER TO ACTUAL COLOUR SAMPLES OF THE END PRODUCT.



Description:
CEMCRETE FLEXBOND
1LT
Code:
(CEM/FB1)



Description:
CEMCRETE FLEXBOND
5LT
Code:
(CEM/FB)



Description:
CEMCRETE POOL PATCHING
1KG
Code:
(CEM/P1)



Description:
CEMCRETE POOL PATCHING
5KG
Code:
(CEM/PS)



Description:
CEMCRETE POOL SEALER
5LT
Code:
(CEM/PS5)



Description:
CEMCRETE POOL SEALER
25LT
Code:
(CEM/PS1)



Description:
CEMCRETE PERMASTOP
5LT
Code:
(CEM/PERM)



Description:
CEMCRETE CHEMWASH
KALAHARI 25KG
Code:
(CEMWASH)



Description:
CEMCRETE CHEMWASH
CLARENS 25KG
Code:
(CEMWASH/K)



Description:
CEMCRETE CHEMWASH
NUTMEG 25KG
Code:
(CEMWASH/N)



Description:
CEMCRETE CRACK FILLER
5LT
Code:
(CEM/CF)



Description:
CEMCRETE CRACK FILLER
1LT
Code:
(CEM/CF1)



Description:
CEMCRETE CRACK FILLER
PRIMER 1KG
Code:
(CEM/CFP)



Description:
ROCKET WHITE CEMENT
50KG
Code:
(WIT/S)



Description:
CEMCRETE POOLCOAT
BLUE
Code:
(CEM/PB)

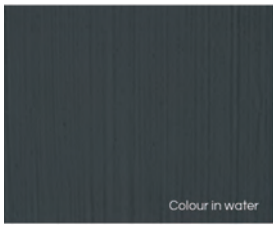

Description:
CEMCRETE POOLCOAT
CHARCOAL
Code:
CAT05/036 (CEM/PC)

Description:
CEMCRETE POOLCOAT
WHITE
Code:
(CEM/PW)



Description:
PLATINUM POOL COATING 5LT
SKY BLUE
Code:
(SAM/P)



Description:
PLATINUM POOL COATING 5LT
WHITE
Code:
(SAM/PW)



Description:
PLATINUM POOL COATING 5LT
CHARCOAL
Code:
(SAM/PC)

PLATINUM POOL COATING AVAILABLE COLOURS.
COLOURS NOT MENTIONED ABOVE OBTAINABLE ON REQUEST



MOSAICS

CODES:
THE SAME FOR ALL BRANCHES

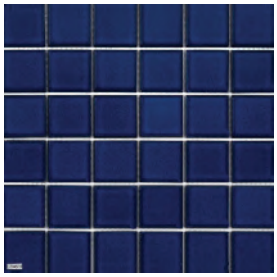

Description:
CERAMIC MOSAIC
CB4820
Code:
(MOS/04)

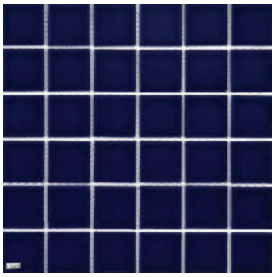

Description:
CERAMIC MOSAIC
FT5356
Code:
(MOS/005A)

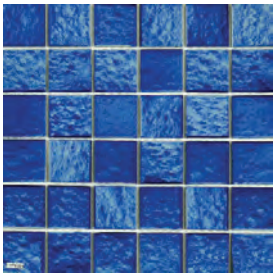

Description:
CERAMIC MOSAIC
FTPX004
Code:
(MOS/002)

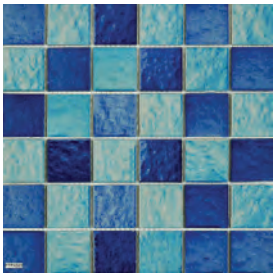

Description:
CERAMIC MOSAIC
FTPX005
Code:
(MOS/005)

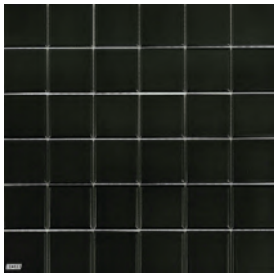

Description:
CERAMIC MOSAIC
FT-CB4803
Code:
(MOS/05B)



Description:
CERAMIC MOSAIC
CB4804
Code:
CAT05/056

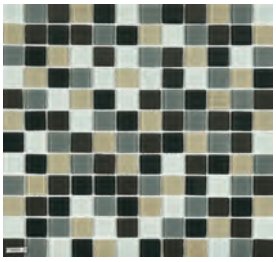

Description:
CERAMIC MOSAIC
FT 5002-23
Code:
(MOS/R)

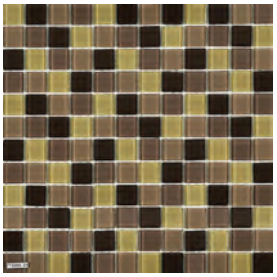

Description:
CERAMIC MOSAIC
FT 5005 23
Code:
(MOS/NW)

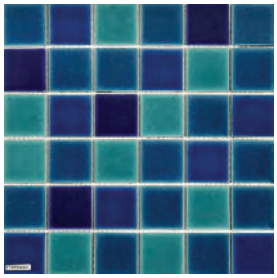

Description:
CERAMIC MOSAIC
FTHPBX001
Code:
CAT05/059

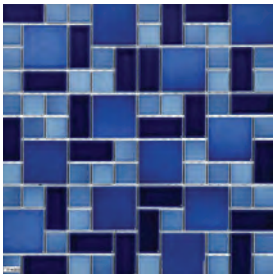

Description:
CERAMIC MOSAIC
FTPX003
Code:
(MOS/01)

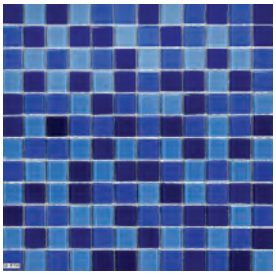

Description:
CERAMIC MOSAIC
ZBMT06
Code:
(MOS/5)

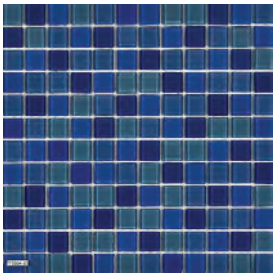

Description:
CERAMIC MOSAIC
FT5004-23
Code:
(MOS/04B)

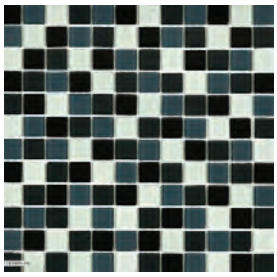

Description:
CERAMIC MOSAIC
FT5T5001-23
Code:
(MOS/MBR)

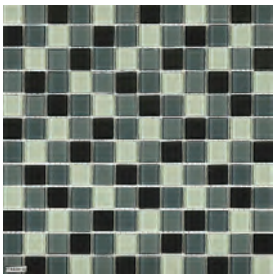

Description:
CERAMIC MOSAIC
FT5008-23
Code:
(MOS/MW)

PLEASE NOTE !!

CERAMIC MOSAICS IN CATALOGUE ARE THE MOST POPULAR BEING SUPPLIED AT THE MOMENT. CERAMIC MOSAICS ARE SUBJECT TO AVAILABILITY, SO PLEASE CONTACT YOUR RELEVANT SALES REPRESENTATIVE FOR PRICING AND STOCK AVAILABILITY.
CERAMIC MOSAICS ARE ALSO SUBJECT TO BATCHES, THE COLOURS OF MOSAICS MAY DIFFER FROM BATCH TO BATCH.

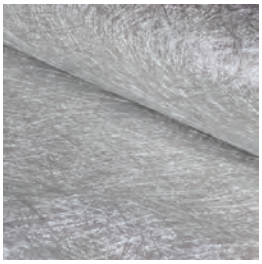

Description:
MATT 450G
1 SQUARE METER
Code:
(MATT)

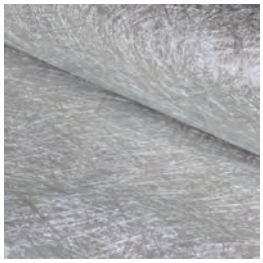

Description:
MATT 150G
PER KG
Code:
(MATT/150)

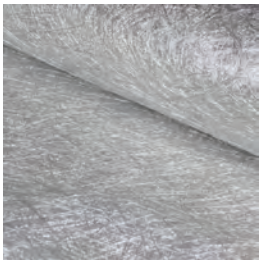

Description:
MATT 300G
PER ROLL
Code:
(MATT/300)

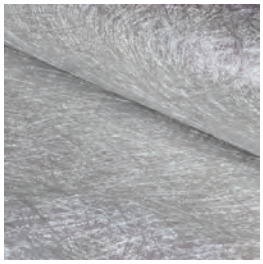

Description:
MATT 450G
PER ROLL
Code:
(MATT/450)

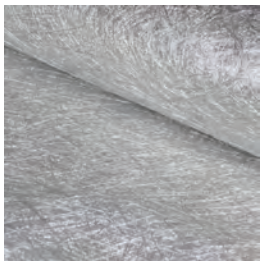

Description:
MATT 450G
10 KG
Code:
(MATT/450-10)

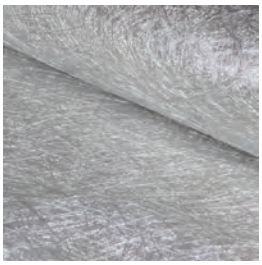

Description:
MATT 450G
5 KG
Code:
(MATT/450-5)



Description:
NCS CLEAR CASTING RESIN
PER KG
Code:
(NCS/CCR)



Description:
NCS GELCOAT BLUE
1KG
Code:
(NCS/GCB1)



Description:
NCS GELCOAT BLUE
25KG
Code:
(NCS/GCB25)



Description:
NCS PATCHING PASTE ULTRA-BOND 25KG
Code:
(NCS/A)

FIBERGLASS & RESINS

CODES:
THE SAME FOR ALL BRANCHES

HYPER POOL Equipment
Everything for your Pool



Description:
NCS GELCOAT CLEAR
1KG
Code:
(NCS/GCC1)

Description:
NCS GELCOAT CLEAR
2KG
Code:
(NCS/GCC2)

Description:
NCS GELCOAT CLEAR
5KG
Code:
(NCS/GCC5)

Description:
NCS GELCOAT CLEAR
25KG
Code:
(NCS/GCC25)



Description:
NCS GELCOAT WHITE
1KG
Code:
(NCS/GCW1)

Description:
NCS GELCOAT WHITE
5KG
Code:
(NCS/GCW5)

Description:
NCS GELCOAT WHITE
25KG
Code:
(NCS/GCW25)



Description:
NCS BLUE ISO RESIN
1KG
Code:
(NCS/RB1)

Description:
NCS BLUE ISO RESIN
2KG
Code:
(NCS/RB2)

Description:
NCS BLUE ISO RESIN
5KG
Code:
(NCS/RB5)

Description:
NCS BLUE ISO RESIN
25KG
Code:
(NCS/RB25)



Description:
NCS CLEAR ISO RESIN 1KG

Code:
(NCS/RC1)

Description:
NCS CLEAR ISO RESIN 2KG

Code:
(NCS/RC2)

Description:
NCS CLEAR ISO RESIN 5KG

Code:
(NCS/RC5)

Description:
NCS CLEAR ISO RESIN 25KG

Code:
(NCS/A)

Description:
NCS CLEAR ISO RESIN 225KG

Code:
(NCS/RC25)



Description:
NCS ACCELERATOR
PER KG
Code:
(NCS/A)



Description:
NCS ATPRIME
5KG + 1KG 30M^2
Code:
(NCS/APT)



Description:
NCS ATPRIME
20KG + 5KG 120M^2
Code:
(NCS/APT1)



Description:
NCS WHITE ISO RESIN
1KG
Code:
(NCS/RW1)

Description:
NCS WHITE ISO RESIN
2KG
Code:
(NCS/RW2)

Description:
NCS WHITE ISO RESIN
5KG
Code:
(NCS/RW5)

Description:
NCS WHITE ISO RESIN
25KG
Code:
(NCS/RW25)



Description:
NCS TOPCOAT SKY BLUE
1KG
Code:
(NCS/TCB1)

Description:
NCS TOPCOAT SKY BLUE
2KG
Code:
(NCS/TCB2)

Description:
NCS TOPCOAT SKY BLUE
5KG
Code:
(NCS/TCB5)

Description:
NCS TOPCOAT SKY BLUE
25KG
Code:
(NCS/TCB25)



Description:
NCS TOPCOAT CLEAR
1KG
Code:
(NCS/TCC1)

Description:
NCS TOPCOAT CLEAR
2KG
Code:
(NCS/TCC2)

Description:
NCS TOPCOAT CLEAR
5KG
Code:
(NCS/TCC5)

Description:
NCS TOPCOAT CLEAR
25KG
Code:
(NCS/TCC25)



Description:
NCS TOPCOAT TINT BLUE
1KG
Code:
(NCS/TCT1)

Description:
NCS TOPCOAT TINT BLUE
2KG
Code:
(NCS/TCT2)

Description:
NCS TOPCOAT TINT BLUE
5KG
Code:
(NCS/TCT5)

Description:
NCS TOPCOAT TINT BLUE
25KG
Code:
(NCS/TCT25)



PIGMENT'S FOR RESIN BASED PRODUCTS AVAIL-ABLE ON REQUEST

FIBERGLASS & RESINS

CODES:
THE SAME FOR ALL BRANCHES



Description:
NCS GLASS TAPE
150MM X 50M
Code:
(NCS/GT)



Description:
NCS GLASS TAPE
100MM X 50M
Code:
(NCS/GT100)



Description:
NCS GLASS TAPE
50MM X 50M
Code:
(NCS/GT50)



Description:
SCOTT BADER PATCHING PASTE
1KG
Code:
(SCO/PP1)

Description:
SCOTT BADER PATCHING PASTE
2KG
Code:
(SCO/PP2)

Description:
SCOTT BADER PATCHING PASTE
5KG
Code:
(SCO/PP5)

Description:
SCOTT BADER PATCHING PASTE
25KG
Code:
(SCO/PP)



Description:
SCOTT BADER TOPCOAT CLEAR
1KG
Code:
(SCO/TCC1)

Description:
SCOTT BADER TOPCOAT CLEAR
2KG
Code:
(SCO/TCC2)

Description:
SCOTT BADER TOPCOAT CLEAR
5KG
Code:
(SCO/TCC5)

Description:
SCOTT BADER TOPCOAT CLEAR
25KG
Code:
(SCO/TCC25)



Description:
SCOTT BADER CLEAR RESIN
25KG
Code:
(SCO/CR)

Description:
SCOTT BADER SKY BLUE RESIN
25KG
Code:
(SCO/BR25)

Description:
SCOTT BADER WHITE RESIN
25KG
Code:
(SCO/R)



Description:
SCOTT BADER TOP COAT SKY BLUE 25KG
Code:
(SCO/TCB)

Description:
SCOTT BADER TOP COAT WHITE
25KG
Code:
(SCO/TCW)



Description:
XTEND-818 MOULD RELEASE 2.6KG
Code:
(RED/R2)

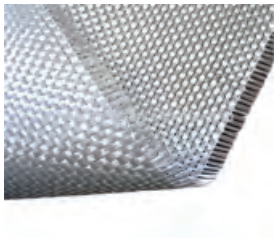

Description:
WOVEN ROVING 450 G PER KG

Code:
(ROV/W)



Description:
TISSUE 100M

Code:
(TIS)

Description:
TISSUE PER METER

Code:
(TIS1)



Description:
WOVEN TAPE 150MM

Code:
(RE/BAND2)

Description:
WOVEN TAPE 50MM

Code:
(RE/BAND50)

MEKP, ACETONE & STYRENE

CODES:
THE SAME FOR ALL BRANCHES



Description:
ACETONE
1LT
Code:
(ACET/2)

Description:
ACETONE
2LT
Code:
(ACET/3)

Description:
ACETONE
5LT
Code:
(ACET/T)

Description:
ACETONE
25LT
Code:
(ACET)



Description:
ALUMINIUM ROLLERS (BIG)
140MM
Code:
(ALUR/140)

Description:
ALUMINIUM ROLLERS (SMALL)
70MM
Code:
(ALUR/75)



Description:
CATALYST/HARDNER
20ML
Code:
(MEKP/6)

Description:
CATALYST/HARDNER
200ML
Code:
(MEKP/5)

Description:
CATALYST/HARDNER
500ML
Code:
(MEKP/4)

Description:
CATALYST/HARDNER
1LT
Code:
(MEKP/3)

Description:
CATALYST/HARDNER
5LT
Code:
(MEKP/2)



Description:
RAM WAX RUN-IN
400ML
Code:
(RAM)



Description:
CATALYST MEASURING BOTTLE
50ML
Code:
(MEKP/B3)

Description:
CATALYST MEASURING BOTTLE
200ML
Code:
(MEKP/B2)

Description:
CATALYST MEASURING BOTTLE
500ML
Code:
(MEKP/B)

Description:
CATALYST MEASURING BOTTLE
1LT
Code:
(MEKP/B1)



Description:
RAM WAX SILICON RELEASE
400ML
Code:
(RAM1)



Description:
STYRENE
1LT
Code:
(STYR2)

Description:
STYRENE
2LT
Code:
(STYR1)

Description:
STYRENE
5LT
Code:
(STYR)



Description:
SCOTT RED RELEASE
1LT
Code:
(RED/R)

Description:
SCOTT RED RELEASE
5LT
Code:
(RED/R1)

LUXOR MOSAICS

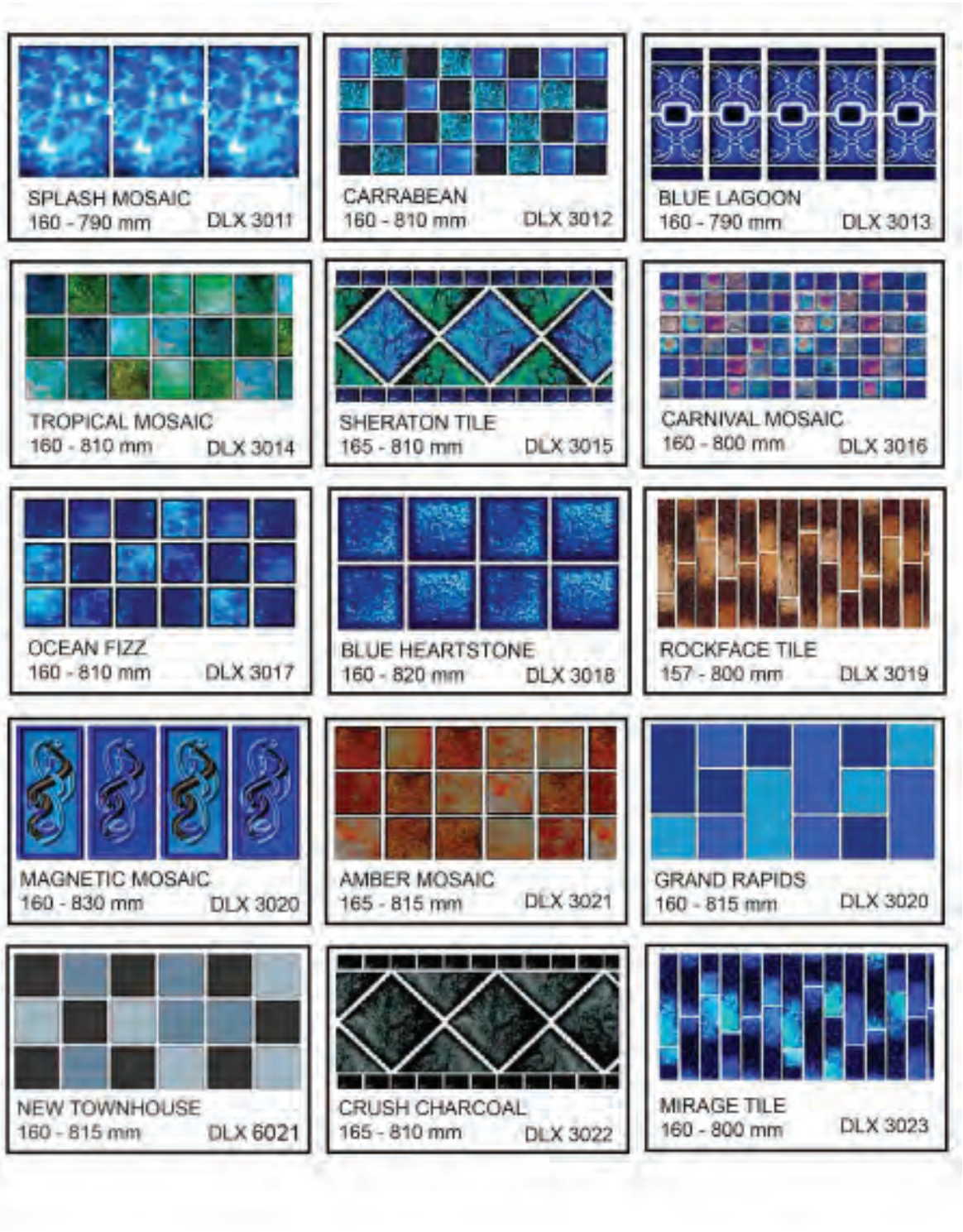

PLEASE NOTE !!

USE THE NAME OF MOSAIC WHEN ORDERING TISSUE MOSIACS,
PLEASE CONSULT YOUR RELEVANT SALES REPRESENTATIVE CONCERNING THE PRICING AND AVAILABILITY ON ALL MOSAICS, AS NOT ALL THE TISSUE MOSAICS ARE STANDARD STOCK ITEMS, ADDITIONAL CHARGES MAY APPLY. NO RETURNS ARE ACCEPTED ON ALL TYPES OF MOSIACS.

FIBERGLASS MOSIACS

CODES:
THE SAME FOR ALL BRANCHES

HYPER POOL Equipment
Everything for your Pool

LUXOR MOSAICS

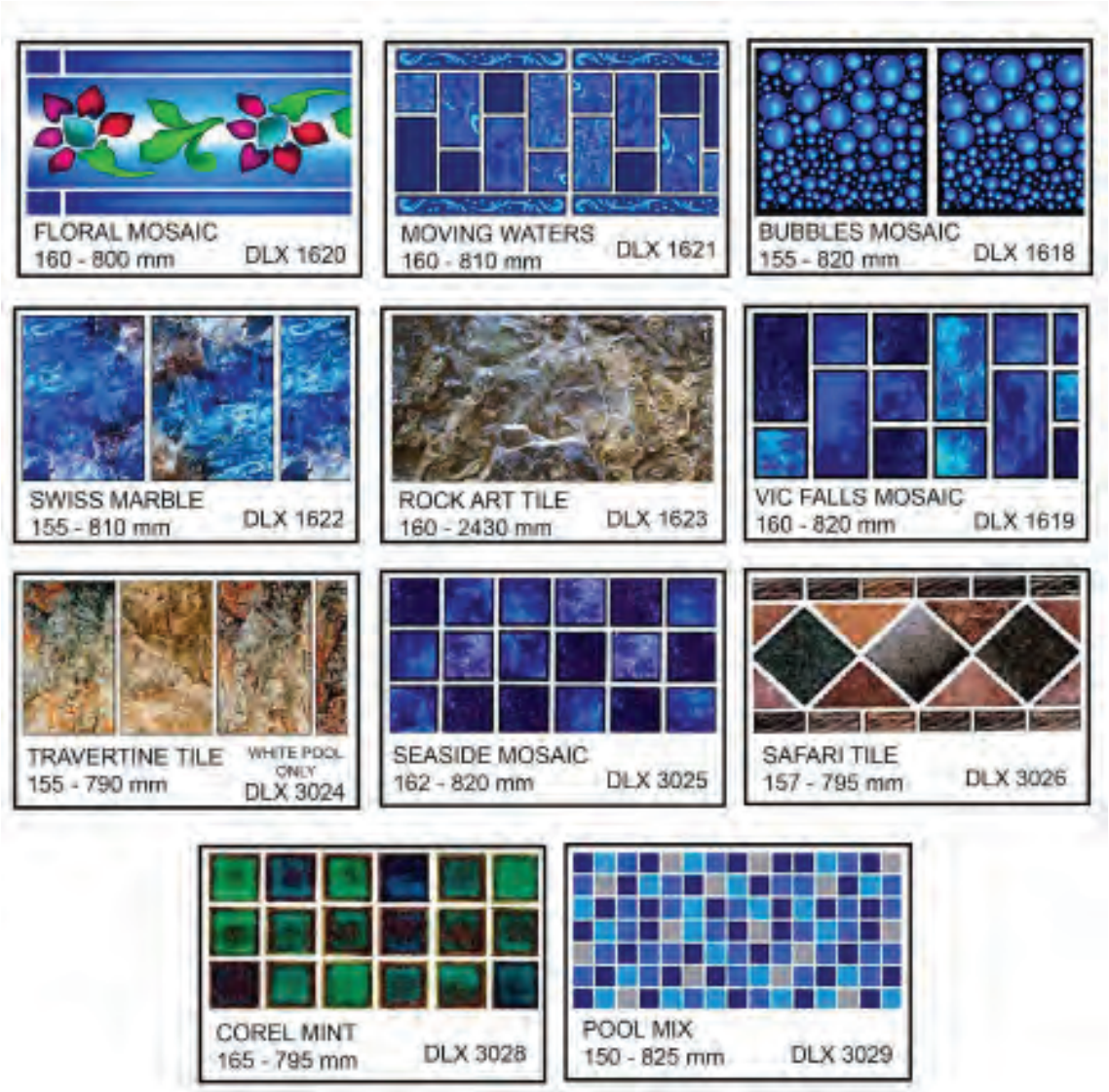

PLEASE NOTE !!

USE THE NAME OF MOSAIC WHEN ORDERING TISSUE MOSIACS,
PLEASE CONSULT YOUR RELEVANT SALES REPRESENTATIVE CONCERNING THE PRICING AND AVAILABILITY ON ALL MOSAICS, AS NOT ALL THE TISSUE MOSAICS ARE STANDARD STOCK ITEMS, ADDITIONAL CHARGES MAY APPLY. NO RETURNS ARE ACCEPTED ON ALL TYPES OF MOSIACS.

FLEXITILE MOSAICS

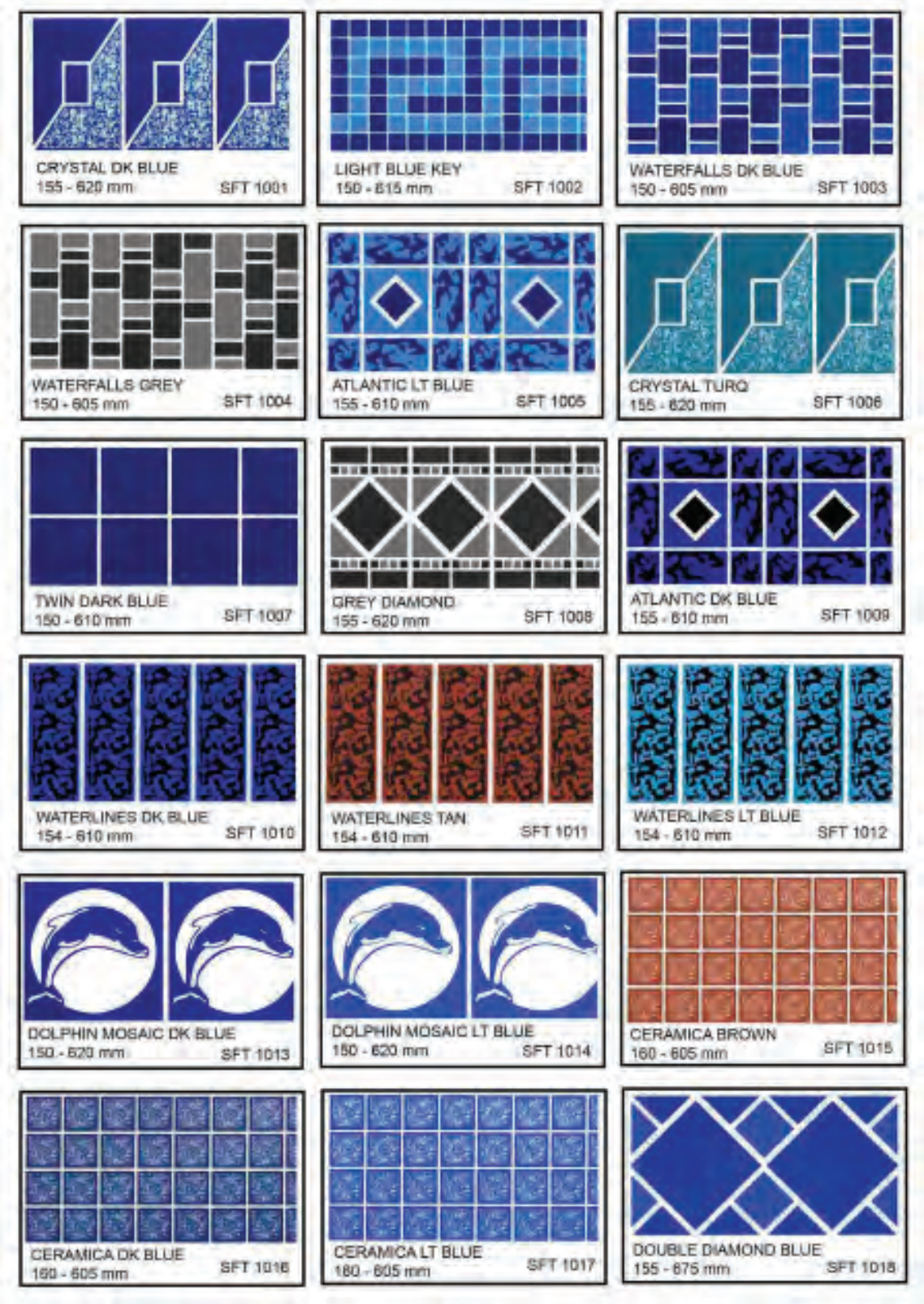

PLEASE NOTE !!

USE THE NAME OF MOSAIC WHEN ORDERING TISSUE MOSIACS,
PLEASE CONSULT YOUR RELEVANT SALES REPRESENTATIVE CONCERNING THE PRICING AND AVAILABILITY ON ALL MOSAICS, AS NOT ALL THE TISSUE MOSAICS ARE STANDARD STOCK ITEMS, ADDITIONAL CHARGES MAY APPLY. NO RETURNS ARE ACCEPTED ON ALL TYPES OF MOSIACS.

FLEXITILE MOSAICS

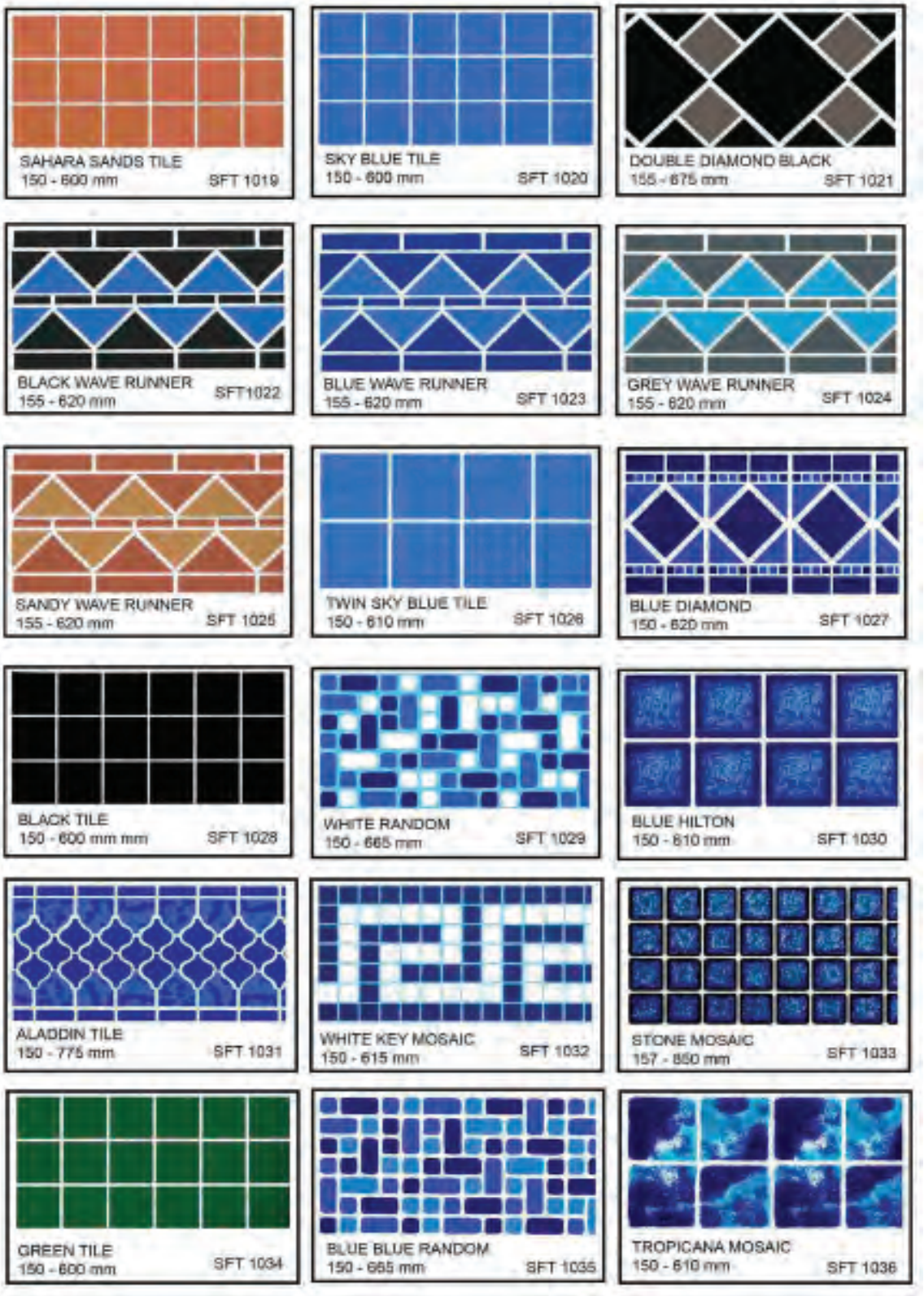

PLEASE NOTE !!

USE THE NAME OF MOSAIC WHEN ORDERING TISSUE MOSIACS,
PLEASE CONSULT YOUR RELEVANT SALES REPRESENTATIVE CONCERNING THE PRICING AND AVAILABILITY ON ALL MOSAICS, AS NOT ALL THE TISSUE MOSAICS ARE STANDARD STOCK ITEMS, ADDITIONAL CHARGES MAY APPLY. NO RETURNS ARE ACCEPTED ON ALL TYPES OF MOSIACS.

FLEXITILE MOSAICS

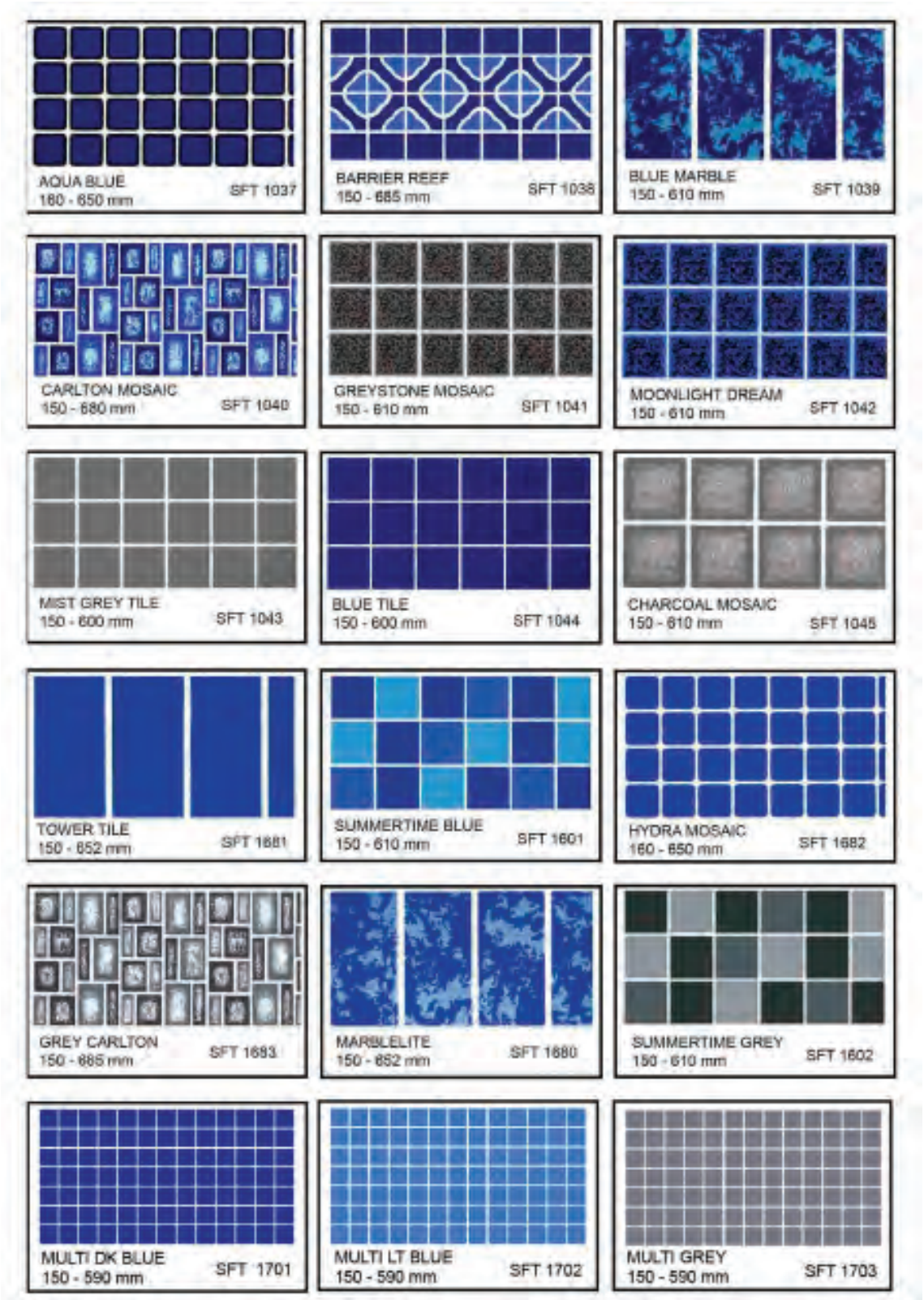

PLEASE NOTE !!

USE THE NAME OF MOSAIC WHEN ORDERING TISSUE MOSIACS,
PLEASE CONSULT YOUR RELEVANT SALES REPRESENTATIVE CONCERNING THE PRICING AND AVAILABILITY ON ALL MOSAICS, AS NOT ALL THE TISSUE MOSAICS ARE STANDARD STOCK ITEMS, ADDITIONAL CHARGES MAY APPLY. NO RETURNS ARE ACCEPTED ON ALL TYPES OF MOSIACS.

STANDARD FIBER TISSUE MOSAICS



TOPAZ 1 (OLD NO 71)

TOPAZ 2 (OLD NO 107)

TOPAZ 3 (OLD NO 105)

TOPAZ 45 (OLD NO 70)

QUADRO DIAMOND PURPLE (OLD NO 113)

GENIE (OLD NO 24)

TUSCAN RIVIERA (OLD NO 111)

TUSCAN WAVE (OLD NO 150)

COBALT 3 (OLD NO 11)

DORADO (OLD NO 13A)

MARBLE (OLD NO 16)

PLEASE NOTE !!

USE THE NAME OF MOSAIC WHEN ORDERING TISSUE MOSIACS,
PLEASE CONSULT YOUR RELEVANT SALES REPRESENTATIVE CONCERNING THE PRICING AND AVAILABILITY ON ALL MOSAICS, AS NOT ALL THE TISSUE MOSAICS ARE STANDARD STOCK ITEMS, ADDITIONAL CHARGES MAY APPLY. NO RETURNS ARE ACCEPTED ON ALL TYPES OF MOSIACS.



Description:
AQUAKING ACID 30%
2LT
Code:
(ACID3)



Description:
AQUAKING ACID 30%
5LT
Code:
(ACID)



Description:
AQUAKING ACID 30%
25LT
Code:
(ACID1)



Description:
AQUAKING STAIN MAGIC
2KG
Code:
(AQUA/SM)



Description:
AQUAKING / ECOGENE GLINT BLOCK
Code:
(CH/GLINT)



Description:
AQUAKING GELBLOCK
70G
Code:
(CH/11)



Description:
AQUAKING / ECOGENE POOL PEROXIDE 5LT
Code:
(CH/57)



Description:
AQUAKING STABILISER
2KG
Code:
(CH/11A)



Description:
AQUAKING SODA ASH
2KG
Code:
(CH/49B)



Description:
AQUAKING ALUM POWDER
2KG
Code:
(CH/88C)



Description:
AQUAKING ALKALINITY BOOSTER
2KG
Code:
(CH/89A)



Description:
AQUAKING CALCIUM FLAKES
2KG
Code:
(CH/CAL)

BULK QUANTITIES ON POWDERS AVAILABLE ON REQUEST
BULK PACKING SIZES ARE NORMALLY 25KG AND 50KG



Description:
AQUAKING METAL MAGIC
1LT
Code:
(CH/58)



Description:
AQUAKING SEA BLUE
1LT
Code:
(CH/90)



Description:
AQUAKING FLOCCULANT
1LT
Code:
(CH/AF)



Description:
ECOGENE ALGECIDE DQ80
1LT
Code:
(ECO/ALG)



Description:
ECOGENE ALGECIDE PP50
1LT
Code:
(ECO/PP50)



Description:
ECOGENE FLOATER M90
1,6KG
Code:
(ECO/FLO)



Description:
ECOGENE FLOATER M90⁺
1,6KG
Code:
(ECO/FL01)



Description:
ECOGENE pH DOWN (DRY ACID)
3KG
Code:
(ACID/L2)



Description:
ECOGENE CHLORINE
4KG
Code:
(CHLO/1)



Description:
ECOGENE CHLORINE
10KG
Code:
(CHLO/10)



Description:
ECOGENE CHLORINE
40KG
Code:
(CH/92A)



Description:
ECOGENE SP 60 SHOCK
500G
Code:
(ECO/FL02)

CHEMICALS AQUAKING



Description:
AQUAKING REFILLABLE FLOATER
1,5 KG
Code:
(BLSA/F)



Description:
AQUAKING REFILLABLE FLOATER
REFILL PACK 1,5KG
Code:
(BLSA/R)



Description:
AQUAKING REFILLABLE FLOATER
BUNDLE PACK
Code:
(BLSA/RF)



Description:
SEA BLUE CONCENTRATE
25LT
Code:
(CH/90A)

CHEMICALS PURESAN



Description:
PURESAN PURE CLEAR
1LT
Code:
(PURE/P)



Description:
PURESAN PURE DROP
30ML
Code:
(PURE/D)



Description:
PURESAN PURE MIST
50ML
Code:
(PURE/M)



Description:
PURESAN PURE FRESH
100ML
Code:
(CH/PURE/PA)



Description:
PURESAN BIO POND
100ML
Code:
(PURE/BB1)



Description:
PURESAN BIO POND
1LT
Code:
(PURE/BP)



Description:
PURESAN BIO POND
5LT
Code:
(PURE/BP5)



Description:
PURESAN BIO POND
20LT
Code:
(PURE/BP2)



Description:
PURESAN WATER TANK PURIFIER
100ML
Code:
(PURE/WTP)



Description:
PURESAN CLEAR SPA
100ML
Code:
(PURE/S)



Description:
PURESAN PURE VET
30ML
Code:
(PURE/VE)



Description:
PURESAN PURE GOLD GEL
50ML
Code:
(PURE/GG)



Description:
PURESAN SURFACE SPRAY
250ML
Code:
(PURE/SS1)



Description:
PURESAN SURFACE SPRAY
1LT
Code:
(PURE/SS)



Description:
PURESAN HAND SANITISER
100ML
Code:
(PURE/HS1)



Description:
PURESAN PURE SCRUB HAND-WASH 100ML
Code:
(PURE/HS3)



Description:
PURESAN PURE SCRUB HAND-WASH 1LT
Code:
CAT07/038 (PURE/HS2)



Description:
PURESAN PURE BIO BLOCK
(10 x 50G)
Code:
CAT07/038 (PURE/BB)



Description:
HYPOCHLOR TABLETS

Code:
(CH/21)



Description:
KLEENCHLOR FLOATER

Code:
(CH/44)



Description:
POOLBRITE CHLOROBUOY
1,5KG
Code:
(CH/61)



Description:
ELARA STAIN GO
500ML
Code:
(CH/73)



Description:
POOL MAGIC 5 IN 1

Code:
(CH/96)



Description:
POOL MAGIC EVOLUTION

Code:
(CH/96A)



Description:
POOL MAGIC STAIN REMOVER
2KG
Code:
(CH/96B)



Description:
ELARA HYPER FLOC
500ML
Code:
(CH/97)



Description:
BRILLIANT FLOATER

Code:
(CH/BF)



Description:
AQUAKING LOOSE CHLORINE PILLS
Code:
(CH/PILL)



Description:
CLARITY GRANULAR CHLORINE
2,5KG
Code:
(CLAR)



Description:
POND CLEAN FILTER BOOST
1LT
Code:
(PONDCLEAN)



Description:
PONDCLEAN FILTER BOOST
250ML
Code:
(PONDCLEAN1)



Description:
POOLBRITE TRU BLUE
2LT
Code:
(SL/CH16)



Description:
POOLBRITE MONTH MATE
1,5KG
Code:
(SL/CH03)



Description:
ACTIVATOR D

Code:
(CH/88C)



Description:
DIATOMACEOUS EARTH
1.25KG
Code:
(CH/01)



Description:
DIATOMACEOUS EARTH
1.75KG
Code:
(CH/02)



Description:
DIATOMACEOUS EARTH
5KG
Code:
(CH/03)



Description:
DIATOMACEOUS EARTH
5KG
Code:
(CH/88C)



Description:
TEST STRIP 3 IN 1
(COPPER TEST)
Code:
(AQUK/032)



Description:
TEST STRIP 5 IN 1

Code:
(AQUK/045)



Description:
TEST STRIPS SALT

Code:
(AQUK/081)



Description:
SALT POOL AND SPA TEST
STRIPS 10'S
Code:
(AQUK/SPA)



Description:
OTO LOOSE
15ML
Code:
(OTO)



Description:
PHENOL RED LOOSE
15ML
Code:
(PHE)



Description:
PHENOL RED
1LT
Code:
(PHE2)



Description:
TEST KIT 4 IN 1

Code:
(HTH/T)



Description:
TEST KIT 2 IN 1
OTO / PHENOL RED
Code:
(OTO/1)



Description:
CYNAURIC TEST TABS
STRIP (10 TABS)
Code:
(SL/TK04)



Description:
COPPER TEST REAGENT
30ML
Code:
(SL/TK11)



Description:
IRON TEST REAGENT
30ML
Code:
(SL/TK12)

TESTING EQUIPMENT

CODES:
THE SAME FOR ALL BRANCHES



Description:
THERMOMETER

Code:
(THE)



Description:
THERMOMETER STANDARD 250ML BLUE

Code:
(THE1)



Description:
THERMOMETER FROG / LOBSTER

Code:
(THE/A3)



Description:
THERMOMETER ANIMALS

Code:
(THE/A)



Description:
LEAF NET

Code:
(LEAF/0)



Description:
LEAF RAKE

Code:
(LEAF/R)



Description:
HOSE CONNECTOR

Code:
(H/C)



Description:
SWEEPER 8 WHEEL

Code:
(SWEEP/01)



Description:
SWEEPER MAXI VAC
(HI-VAC)
Code:
(SWEEP/02)



Description:
REPLACEMENT BRUSH
MAXI VAC / HI VAC
Code:
(SWEEP/04)



Description:
SWEEPER SUPERVAC

Code:
(SWEEP/02F)



Description:
REPLACEMENT BRUSH
SUPER VAC
Code:
(SWEEP04A)



Description:
SWEEPER STANDARD
360MM
Code:
(SWEEP/06)



Description:
SWEEPER STANDARD
450MM
Code:
(SWEEP/11)



Description:
SWEEPER DELUX (CURVED)
450MM
Code:
(SWEEP/10A)



Description:
SWEEPER BIG ALGAE

Code:
(SWEEP/07A)



Description:
SWEEPER STAINLESS STEEL

Code:
(SL/SWEEP04)



Description:
ALUMINIUM HANDLE SCREWS

Code:
(ALUM/H/S)



Description:
HANDLE TELESCOPIC
1,9M TO 3,6M
Code:
(HAND/T2)



Description:
HANDLE TELESCOPIC
2,4M TO 4,8M
Code:
(HAND/4T)



Description:
ALUMINIUM HANDLE
2M
Code:
(HAND2)



Description:
ALUMINIUM HANDLE
3M
Code:
(HAND3)



Description:
ALUMINIUM HANDLE
4M
Code:
(HAND4)



Description:
ALUMINIUM HANDLE
5M
Code:
(HAND5)



Description:
EQ PUMP & MOTOR
0,6KW 230V
Code:
(EQ,6)



Description:
EQ PUMP & MOTOR
0,75KW 230V
Code:
(EQ,75)



Description:
EQ PUMP & MOTOR
1,1KW 230V
Code:
(EQ1,1)



Description:
EQ PUMP & MOTOR SELF DRAIN
0,75KW 230V
Code:
(EQ,75SD)



Description:
EQ PUMP & MOTOR SELF DRAIN
1,1KW 230V
Code:
(EQ1,1SD)



Description:
EQ PUMP LID

Code:
(QPS/10)

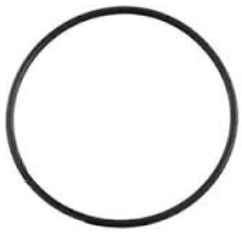

Description:
EQ PUMP LID O-RING

Code:
(QPS/11)



Description:
EQ PUMP BASKET

Code:
(QPS/01)



Description:
EQ PUMP SHAFT SEAL
(MECHANICAL SEAL)
Code:
(QPS/012)



Description:
EQ PUMP DIFFUSER

Code:
(QPS/04)

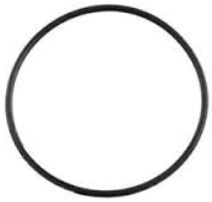

Description:
EQ PUMP DIFFUSER O-RING

Code:
(QPS/07)



Description:
EQ PUMP DIFFUSER SCREWS
EACH (3 PER PUMP)
Code:
(QPS/05A)



Description:
EQ PUMP FLANGE

Code:
(QPS/06)

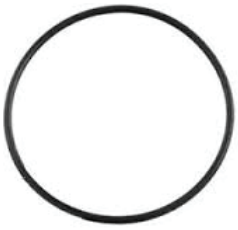

Description:
EQ PUMP FLANGE O-RING

Code:
(QPS/07)



Description:
EQ PUMP FLANGE BOLT(EACH) 8X30 (4 PER PUMP)
Code:
(QPS/06A)



Description:
EQ PUMP FLANGE BOLT O-RING (4 PER PUMP)
Code:
(QPS/06B)



Description:
EQ PUMP CLAMP COMPLETE

Code:
(QPS/03)



Description:
EQ PUMP LID LOCK HANDLE (KNOB)
Code:
(QPS/09)



Description:
EQ PUMP BALL SCREW BRASS STUD
Code:
(QPS/09)



Description:
EQ PUMP CLAMP PAD

Code:
(QPS/09A)



Description:
EQ PUMP STAND AND PAD

Code:
(QPS/02A)



Description:
EQ PUMP BODY WITH INSERTS AND UNIONS
Code:
(QPS/02)



Description:
EP PUMP FLINGER

Code:
(QPS/01)



Description:
EQ BRASS SHAFT SLEEVE THREADED
Code:
(QPS/BS)



Description:
EQ PUMP BODY SCREWS 6X25 (8 PER PUMP)
Code:
(QPS/28)



Description:
EQ PUMP BODY BRASS INSERTS M6 (8 PER PUMP)
Code:
(QPS/33)



Description:
EQ PUMP TERMINAL BOX K71 BOTTOM & COVER
Code:
(QPS/30)



Description:
EQ PUMP TERMINAL BOX K80 BOTTOM & COVER
Code:
(QPS/29)



Description:
EQ PUMP MOTOR FAN COWL K71
Code:
(QPS/31A)



Description:
EQ PUMP MOTOR FAN COWL K80
Code:
(QPS/31)



Description:
EQ PUMP MOTOR FAN K71
Code:
(QPS/16C)



Description:
EQ PUMP MOTOR FAN K80
Code:
(QPS/16B)



Description:
EQ PUMP MOTOR DRIVE END SHIELD K71
Code:
(QPS/27C)



Description:
EQ PUMP MOTOR NON DRIVE END SHIELD K71
Code:
(QPS/27)



Description:
EQ PUMP MOTOR DRIVE END SHIELD K80
Code:
(QPS/27D)



Description:
EQ PUMP MOTOR NON DRIVE END SHIELD K80
Code:
(QPS/27A)



Description:
EQ PUMP IMPELLER
0.6KW
Code:
(QPS/7A)



Description:
EQ PUMP IMPELLER
0.75KW
Code:
(QPS/7B)



Description:
EQ PUMP IMPELLER
1,1KW
Code:
(QPS/08)

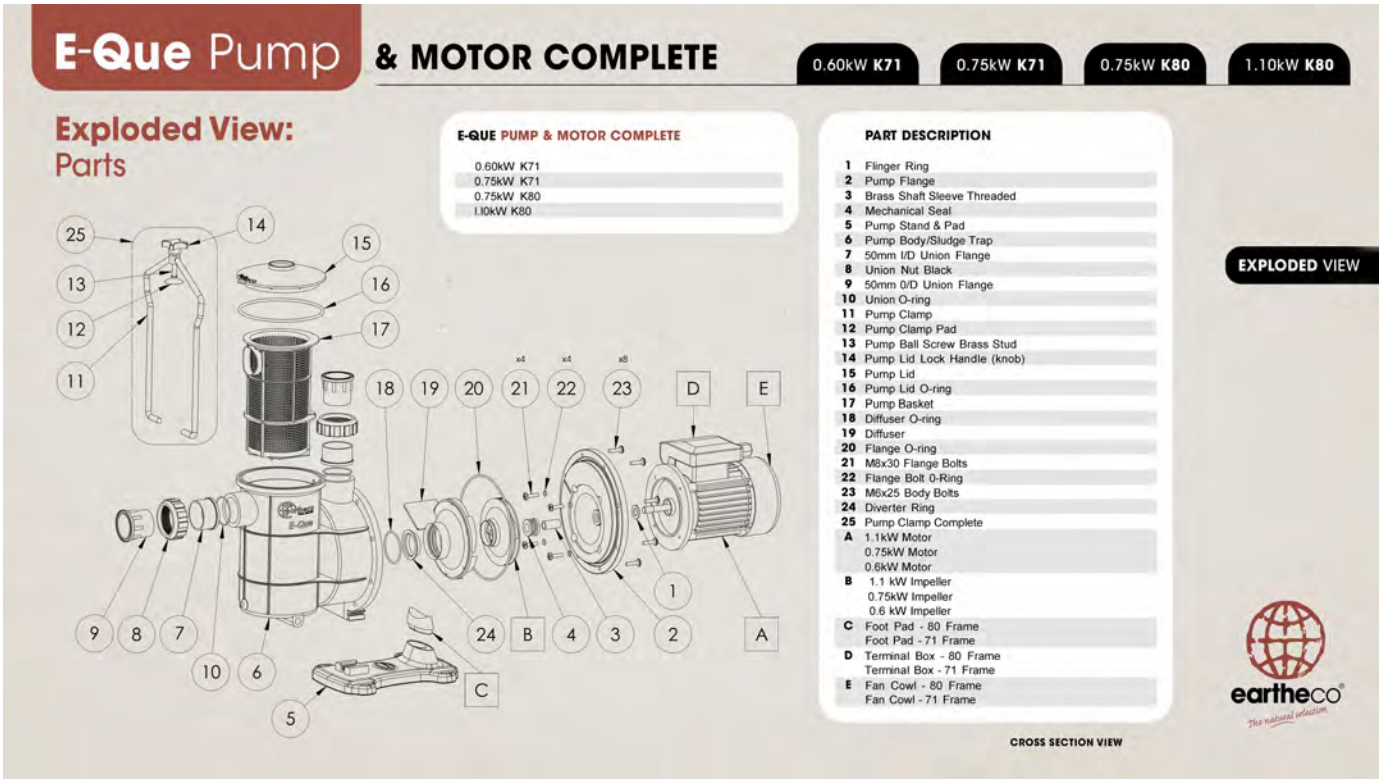

E-Que Pump & MOTOR COMPLETE

0.60kW K71 | 0.75kW K71 | 0.75kW K80 | 1.10kW K80

Cross Section View (unique features)

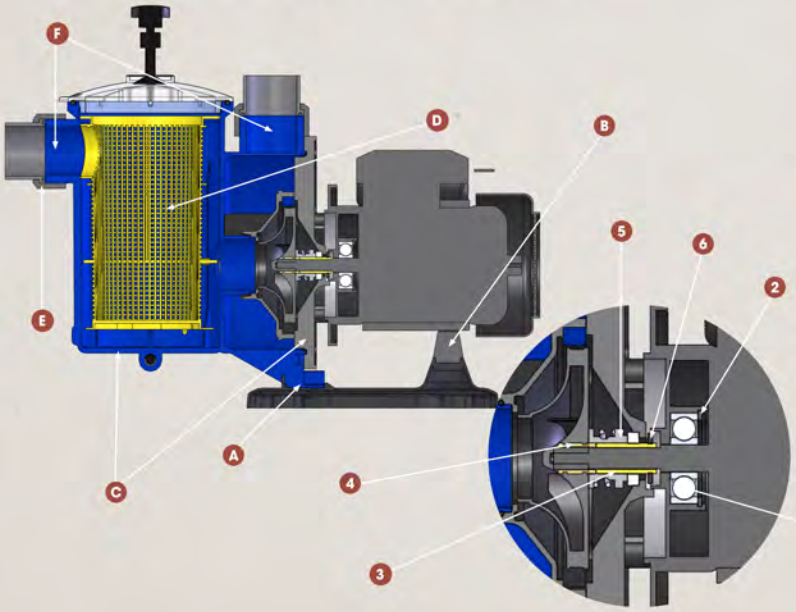

COMPLETE PUMP

A	Clip-on foot feature
B	Rubberised Motor Support
C	Reinforced Body and Seal Plate
D	Large Orientated Basket
E	50mm Union
F	Internal 1.5" BSP Thread

IMPELLER & SHAFT SEAL

1	Heavy Duty Ball Bearing
2	Bearing Retaining Clip [to limit axial movement]
3	Brass Sleeve
4	Brass Impeller Insert
5	High Quality Mechanical Seal
6	Flinger Ring

CROSS SECTION

eartheco The natural selection

E-Que Pump & MOTOR COMPLETE

0.60kW K71 | 0.75kW K71 | 0.75kW K80 | 1.10kW K80

Pump Curves: Performance Graph



MAXIMUM TOTAL DYNAMIC HEAD (m)

SIZE (kW)	METERS (m)
0.60	14
0.75	16
1.10	17.5

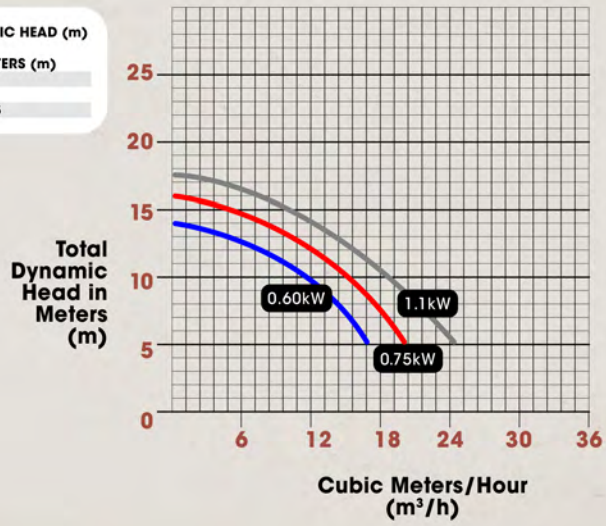

PUMP CURVES

eartheco The natural selection



Description:
RAPID PUMP & MOTOR
0,6KW 230V
Code:
(RP,6)



Description:
RAPID PUMP & MOTOR
0,75KW 230V
Code:
(RP,75)



Description:
RAPID PUMP & MOTOR
1,1KW 230V
Code:
(RP1,1)



Description:
RAPID PUMP & MOTOR SELF DRAIN 0,6KW 230V
Code:
(RPM,6)



Description:
RAPID PUMP & MOTOR SELF DRAIN 0,75KW 230V
Code:
(RPM,75)



Description:
RAPID PUMP & MOTOR SELF DRAIN 1,1KW 230V
Code:
(RPM1,1)



Description:
RAPID PUMP & MOTOR
0,75KW 230V (3 FASE)
Code:
(RP,75/1)



Description:
RAPID PUMP & MOTOR
1,1KW 380V (3 FASE)
Code:
(RP1,1/1)



Description:
RAPID LEAF TRAP COMPLETE

Code:
(RP/S31)



Description:
RAPID LEAF TRAP LID PLASTIC (PUMP LID)
Code:
(RPS/02)

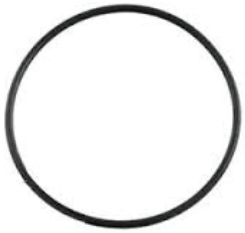

Description:
RAPID LEAF TRAP LID O-RING (PUMP LID O-RING)
Code:
(RP/S06)



Description:
RAPID LEAF TRAP BASKET (PUMP BASKET)
Code:
(RP/S02)



Description:
RAPID MECHANICAL SEAL

Code:
(RP/S04)



Description:
RAPID PUMP DIFFUSER

Code:
(RP/S08)

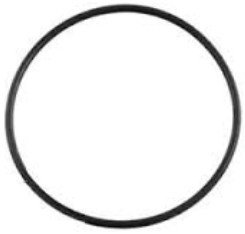

Description:
RAPID BODY O-RING

Code:
(RP/S28)



Description:
RAPID SEAL PLATE NYLON 8 HOLE
Code:
(RP/S16)



Description:
RAPID LEAF TRAP BASKET RETAINING RING
Code:
(RP/S29)



Description:
RAPID SQUARE GASKET

Code:
(RP/S13)



Description:
RAPID SLINGER RING

Code:
(RP/S14)



Description:
RAPID PUMP SEAL RING / DIFFUSER O-RING
Code:
(RP/S07)



Description:
RAPID PUMP CLAMP COMPLETE

Code:
(RP/S26)



Description:
RAPID PUMP LOCK HANDLE

Code:
(RP/S15)



Description:
RAPID PUMP BALL SCREW BRASS STUD
Code:
(RP/S01)



Description:
RAPID PUMP CLAMP PAD

Code:
(RP/S25)



Description:
RAPID BODY SCREWS M10X40 (8 PER PUMP)
Code:
(RP/S21)



Description:
RAPID PUMP FOOT END PUMP BASE
Code:
(RP/S18)



Description:
RAPID PUMP TERMINAL BOX K71 BOTTOM & COVER
Code:
(RP/STB)



Description:
RAPID PUMP TERMINAL BOX K80 BOTTOM & COVER
Code:
(RP/STB1)



Description:
RAPID PUMP MOTOR FAN COWL K71
Code:
(QPS/31A)



Description:
RAPID PUMP MOTOR FAN COWL K80
Code:
(QPS/31)



Description:
RAPID PUMP MOTOR FAN K71
Code:
(QPS/16C)



Description:
RAPID PUMP MOTOR FAN K80
Code:
(QPS/16C)



Description:
RAPID PUMP MOTOR DRIVE END SHIELD K71
Code:
(RP/S12)



Description:
RAPID PUMP MOTOR NON DRIVE END SHIELD K71
Code:
(RP/S12B)



Description:
RAPID PUMP MOTOR DRIVE END SHIELD K80
Code:
(RP/S12A)



Description:
RAPID PUMP MOTOR NON DRIVE END SHIELD K80
Code:
(RP/S12C)



Description:
RAPID PUMP IMPELLER
0.6KW
Code:
(RP/08)



Description:
RAPID PUMP IMPELLER
0.75KW
Code:
(RP/08A)



Description:
RAPID PUMP IMPELLER
1,1KW
Code:
(RP/08B)



Description:
RAPID PUMP BODY ONLY

Code:
(RP/S24)



Description:
RAPID PUMP LEAF TRAP

Code:
(RP/S32)



Description:
RAPID MOTOR ONLY 0,6KW 230V
BARE SHAFT
Code:
(RP,6M)



Description:
RAPID MOTOR ONLY 0,75KW 230V
BARE SHAFT
Code:
(RP,75M)



Description:
RAPID MOTOR ONLY 1,1KW 230V
BARE SHAFT
Code:
(RP1,1M)

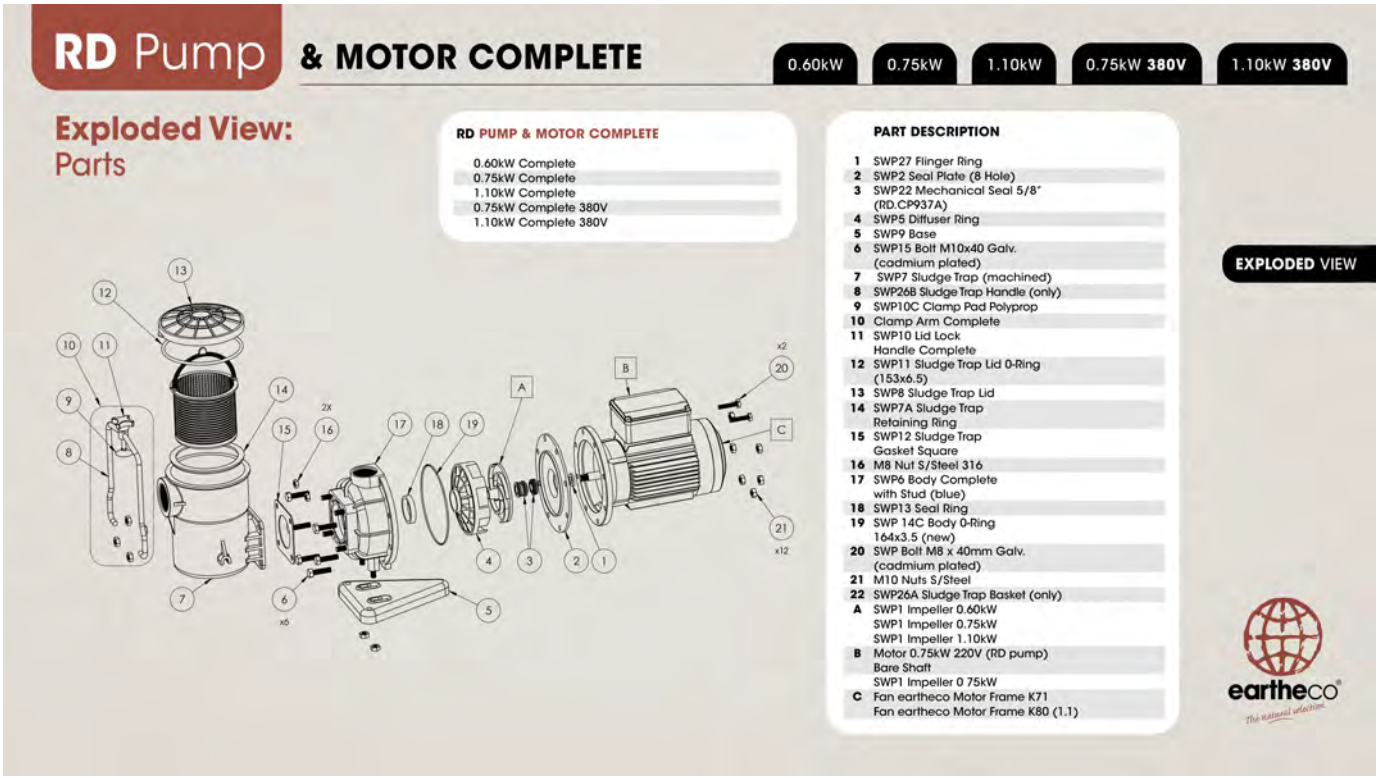

RD Pump & MOTOR COMPLETE

0.60kW | 0.75kW | 1.10kW | 0.75kW 380V | 1.10kW 380V

Cross Section View (unique features)

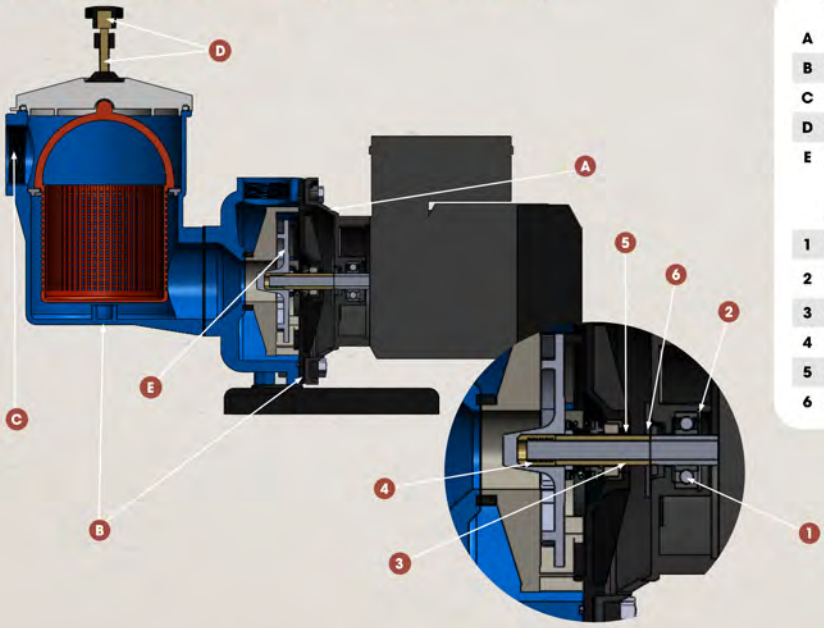

COMPLETE PUMP

A	Large Diameter Motor Flange
B	Reinforced body and seal plate
C	Large 2" BSP Intake
D	Brass Ball Screw and Insert
E	Highly Reinforced Open Impeller

IMPELLER & SHAFT SEAL

1	Heavy Duty Ball Bearing
2	Bearing Retaining Clip [to limit axial movement]
3	Brass Sleeve
4	Brass Impeller Insert
5	High Quality Mechanical Seal
6	Flinger Ring

EXPLODED VIEW, PARTS & PART NUMBERS

CROSS SECTION

eartheco

RD Pump & MOTOR COMPLETE

0.60kW | 0.75kW | 1.10kW | 0.75kW 380V | 1.10kW 380V

Pump Curves:
Performance Graph



MAXIMUM TOTAL DYNAMIC HEAD (m)

SIZE (kW)	METERS (m)
0.60	17.5
0.75	17.5
1.10	18

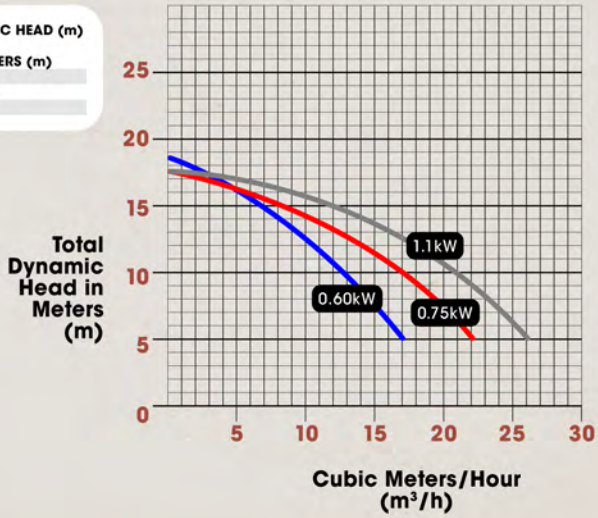

PUMP CURVES

eartheco



Description:
AQUAKING STORM POOL PUMP
1,5KW
Code:
(AKPP003)



Description:
EUROSWIM 50M
(0.33KW) EQUAL TO (0.6KW)
Code:
(EUR0,6)



Description:
EUROSWIM 70M
(0.35KW) EQUAL TO (0.75KW)
Code:
(EUR0,75)



Description:
EUROSWIM 100M
(0.75KW) EQUAL TO (1.1KW)
Code:
(EUR01,1)



Description:
EUROSWIM 150M
(1.1KW) EQUAL TO (1.5KW)
Code:
(EUR01,5)



Description:
EUROSWIM 200M
(1.5KW) EQUAL TO (2.2KW)
Code:
(EUR02,2)



Description:
QUALITY PUMP & MOTOR 230V
1,5KW
Code:
(EQ1,5)



Description:
E-POWER PUMP & MOTOR
2,2KW
Code:
(EQ2,2)



Description:
BEARING 6003

Code:
(B/6003)



Description:
BEARING 6004

Code:
(B/6004)



Description:
BEARING 6005

Code:
(B/6005)



Description:
BEARING 6200

Code:
(B/6200)



Description:
BEARING 6201

Code:
(B/6201)



Description:
BEARING 6202

Code:
(B/6202)



Description:
BEARING 6203

Code:
(B/6203)



Description:
BEARING 6204

Code:
(B/6204)



Description:
BEARING 6205

Code:
(B/6205)



Description:
BEARING 6302

Code:
(B/6302)



Description:
BEARING 6303

Code:
(B/6303)



Description:
BEARING 6304

Code:
(B/6304)



Description:
PUMP CAPASITOR 16MF
PLAIN
Code:
(QPS/14)



Description:
PUMP CAPASITOR 16MF
WITH WIRE
Code:
(QPS/14A)



Description:
PUMP CAPASITOR 20MF
PLAIN
Code:
(QPS/15)



Description:
PUMP CAPASITOR 20MF
WITH WIRE
Code:
(QPS/15A)



Description:
PUMP CAPASITOR 25MF
PLAIN
Code:
(QPS/15C)



Description:
PUMP CAPASITOR 25MF
WITH WIRE
Code:
(QPS/15D)



Description:
PUMP CAPASITOR 30MF
PLAIN
Code:
(QPS/15E)



Description:
PUMP CAPASITOR 30MF
WITH WIRE
Code:
(QPS/15F)



Description:
PUMP CAPASITOR 35MF
PLAIN
Code:
(QPS/15B)



Description:
PUMP CAPASITOR 40MF
PLAIN
Code:
(QPS/15G)



Description:
EQ 1 BAG FILTER COMPLETE

Code:
(FIL/K1)



Description:
EQ 2 BAG FILTER COMPLETE

Code:
(FIL/E2)



Description:
EQ 3 BAG FILTER COMPLETE

Code:
(FIL/E3)



Description:
EQ 4 BAG FILTER COMPLETE

Code:
(FIL/K4)



Description:
EQ 5 BAG FILTER COMPLETE

Code:
(FIL/E5)



Description:
MPV (MULTIPORT VALVE)
COMPLETE GLUED
Code:
(MPV/OIE)



Description:
MPV (MULTIPORT VALVE)
COMPLETE THREADED
Code:
(MPV/01B)



Description:
MPV (MULTIPORT VALVE)
TOP ONLY (O-RING INCLUDED)
Code:
(MPV02)



Description:
MPV (MULTIPORT VALVE)
WAGON WHEEL
Code:
(MPV/14)



Description:
MPV (MULTIPORT VALVE)
SIGHT GLASS
Code:
(MPV/12)



Description:
MPV (MULTIPORT VALVE)
SIGHT GLASS & DIFF O-RING
Code:
(MPV/07)



Description:
MPV (MULTIPORT VALVE)
HANDLE
Code:
(MPV/08)



Description:
MPV (MULTIPORT VALVE)
BRASS PIN
Code:
(MPV/03)



Description:
MPV (MULTIPORT VALVE)
1/4 PLUG
Code:
(MPV/05)



Description:
MPV (MULTIPORT VALVE)
DIFFUSER
Code:
(MPV/06)



Description:
MPV (MULTIPORT VALVE)
NYLON WASHER
Code:
(MPV/13)



Description:
MPV (MULTIPORT VALVE)
STAINLESS STEEL WASHER
Code:
(MPV/13A)



Description:
MPV (MULTIPORT VALVE)
STAINLESS STEEL SPRING
Code:
(MPV/11)



Description:
MPV (MULTIPORT VALVE)
LID ONLY
Code:
(MPV/09)

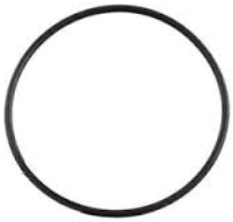

Description:
MPV (MULTIPORT VALVE)
TOPO-RING
Code:
(MPV/10)



Description:
MPV (MULTIPORT VALVE)
BODY BOTTOM ONLY
Code:
(MPV/02A)



Description:
MPV (MULTIPORT VALVE)
TOP SCREWS (EACH)
Code:
(MPV/15)



Description:
MPV (MULTIPORT VALVE)
PRESSURE GUAGE
Code:
(PRES/G)



Description:
FILTER LID & O-RING

Code:
(FS/03)

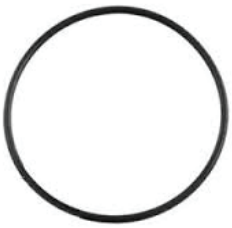

Description:
FILTER LID O-RING

Code:
(FS/04)



Description:
FILTER LID SCREWS

Code:
(FS/12)



Description:
FILTER VENT COWL

Code:
(FS/11)

Description:
FILTER AIR RELEASE PIPE
(BLEEDER PIPE)

Code:
(FS/01)



Description:
FILTER UNDER DRAIN COMPLETE

Code:
(FS/08A)



Description:
FILTER UNDER DRAIN HUB

Code:
(FS/10A)



Description:
FILTER FINGERS WHITE

Code:
(FS/09A)



Description:
FILTER FINGERS BLACK (KOI)

Code:
(FS/KF)

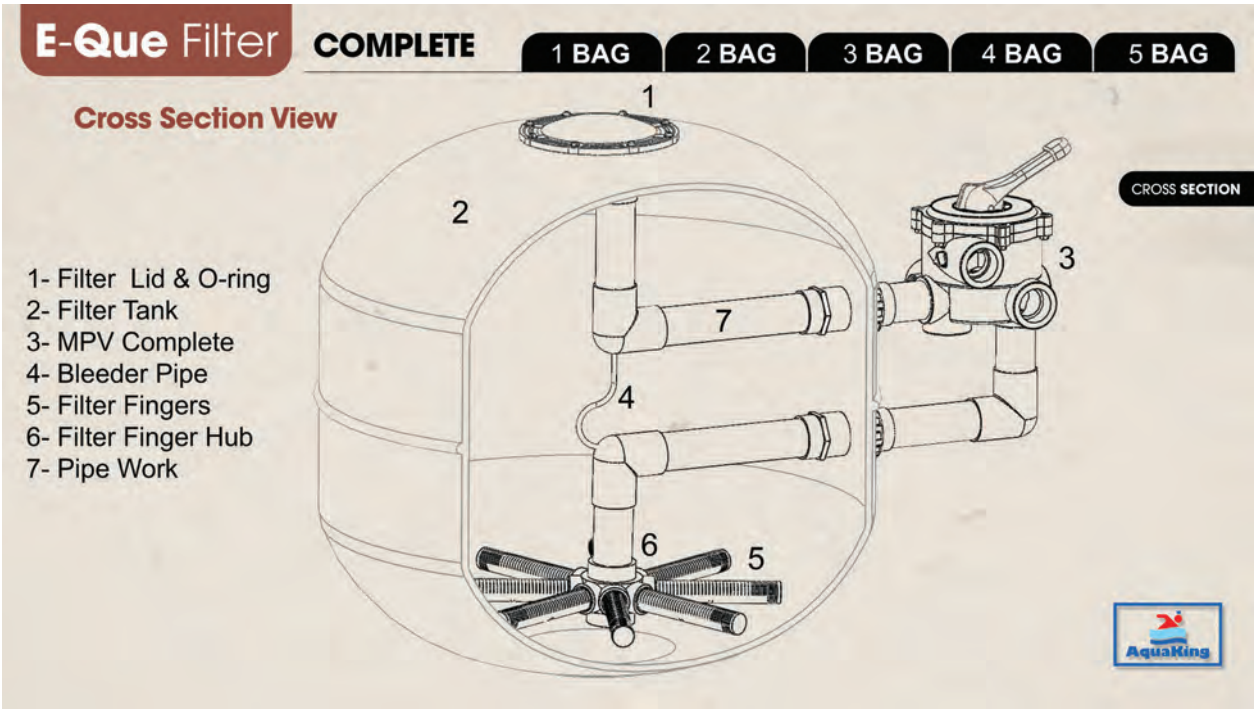

CODES:
THE SAME FOR ALL BRANCHES

COMBI UNITS



Description:
COMBI UNIT 0,6 S/LINE 2BAG
18 VA ELECTRICAL BOX
Code:
(COM/R,6SL)

Description:
COMBI UNIT 0,75 S/LINE 2BAG
18 VA ELECTRICAL BOX
Code:
(COM/R,75SL2)

Description:
COMBI UNIT 0,75 S/LINE 3BAG
18 VA ELECTRICAL BOX
Code:
(COM/R,75SL3)

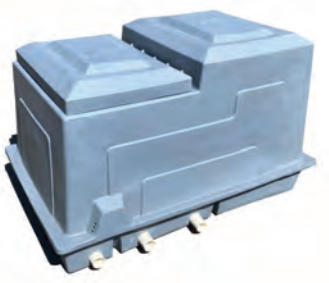

Description:
COMBI UNIT 1,1 S/LINE 3BAG
18 VA ELECTRICAL BOX
Code:
(COM/R1,1SL3)

Description:
COMBI UNIT 0,75 S/LINE 4BAG
18 VA ELECTRICAL BOX
Code:
(COM1,14BAG)



Description:
COMBI UNIT 0,6 R/BOX 2BAG
18 VA ELECTRICAL BOX
Code:
(COM/R,6R2)

Description:
COMBI UNIT 0,75 R/BOX 3BAG
18 VA ELECTRICAL BOX
Code:
(COM/R,75R3)

Description:
COMBI UNIT 0,75 R/BOX 2BAG
18 VA ELECTRICAL BOX
Code:
(COM/R,75R2)

Description:
COMBI UNIT 1,1 R/BOX 3BAG
18 VA ELECTRICAL BOX
Code:
(COM/R,1,1R)



Description:
COMBI UNIT 0,6 SQUARE 2BAG
18 VA ELECTRICAL BOX
Code:
(COM/R,6SQ2)

Description:
COMBI UNIT 0,75 SQUARE 2BAG
18 VA ELECTRICAL BOX
Code:
(COM/R,75SQ2)

Description:
COMBI UNIT 0,75 SQUARE 3BAG
18 VA ELECTRICAL BOX
Code:
(COM/R,75R3)

Description:
COMBI UNIT 1,1 SQUARE 3BAG
18 VA ELECTRICAL BOX
Code:
(COM/R1,1SQ3)

Description:
COMBI UNIT 0,25 KW 1/2BAG
FILTER PENTAIR
Code:
(COM/0,2KK)



Description:
COMBI UNIT 1,1 SQUARE 5BAG
18 VA ELECTRICAL BOX
Code:
(COM/R1,1SQ5)



Description:
COMBI UNIT 1BAG 0,75KW
STORM
Code:
(COM/R,75)

COMBI UNITS ARE FITTED WITH EITHER RAPID OR EQ PUMPS.
PUMP BOX WITH BASE (S/LINE) UNITS CAN ONLY BE FITTED WITH FILTERS UP TO A 4 BAG FILTER.
ROCK BOX (R/BOX) UNITS CAN ONLY BE FITTED WITH FILTERS UP TO A 3 BAG FILTER.
SQUARE BOX (SQUARE) UNITS CAN BE FITTED WITH FILTERS UP TO A 5 BAG FILTER.
SQUARE BOXES ARE AVAILABLE IN TWO SIZES, STANDARD AND LARGE.
18 V/A TRANSFORMERS ARE STANDARD IN ELECTRICAL BOXES.
OTHER TRANSFORMERS CAN BE FITTED ON REQUEST.
IF OTHER COMBINATIONS THAN WHAT IS MENTIONED ABOVE ARE REQUIRED,
PLEASE REFER TO YOUR SALES CONSULTANT FOR AVALIBILITY AND PRICING.

PUMP BOXES

CODES:
THE SAME FOR ALL BRANCHES



Description:
PUMP BOX SQUARE SMALL
0,9M X 0,9M X 0,65M
Code:
(PB/FE)



Description:
PUMP BOX SQUARE LARGE
1,1M X 1,1M X 0,8M
Code:
(PB/LB)



Description:
MOTOR COVER

Code:
(PB/M)



Description:
ROCK BOX SMALL
1,03M X 0,87M X 0,46M
Code:
(PB/R)



Description:
ROCK BOX LARGE
1,03M X 0,85M X 0,5M
Code:
(PB/R1)

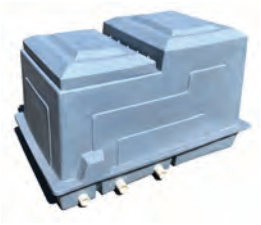

Description:
PUMP BOX WITH BASE
(SWIMLINE PUMP BOX)
Code:
(PB/SW)

SQUARE PUMP BOXES ARE AVAILABLE IN EITHER GREEN OR BROWN



Description:
EQ 160+ LED LIGHT BLUE
COMPLETE
(1200 E-LUMENS) 4 WATT
Code:
(LED/EQB160)



Description:
EQ 500+ LED LIGHT BLUE
COMPLETE
(2600 E-LUMENS) 9 WATT
Code:
(LED/EQB500)



Description:
EQ 1500+ LED LIGHT COLOUR
CHANGING COMPLETE
(4000 E-LUMENS MAX) 9WATT
Code:
(LED/EDB1500)



Description:
EQ 160+ LED LIGHT BLUE
RETRO FIT
(1200 E-LUMENS) 4 WATT
Code:
(LED/EQR160)



Description:
EQ 500+ LED LIGHT BLUE
RETRO FIT
(2600 E-LUMENS) 9 WATT
Code:
(LED/EQR500)



Description:
EQ 1500+ LED LIGHT COLOUR
CHANGING RETRO FIT
(1200 E-LUMENS) 9 WATT
Code:
(LED/EQC)



Description:
BAO 200 LED LIGHT BLUE OR
WHITE
(1400 E-LUMENS) 6 WATT
Code:
(LED/BAO200)



Description:
BAO 600 LED LIGHT BLUE OR
WHITE
(4100 E-LUMENS) 12 WATT
Code:
(LED/DAO600)



Description:
EQ LED LIGHT AIMFLOW
WHITE
(1200 E-LUMENS) 4 WATT
Code:
(LED/WA)



Description:
EQ LED LIGHT AIMFLOW
BLUE
(1200 E-LUMENS) 4 WATT
Code:
(LED/BA)



Description:
EQ LED LIGHT AIMFLOW
COLOUR CHANGING
(4000 E-LUMENS MAX) 9 WATT
Code:
(LED/CA)

BLUE IS THE STANDARD COLOUR FOR THE EQ MONOCHROME LED LIGHTS,STANDARD AS WELL AS AIMFLOW.
WHITE LED LIGHTS ARE ALSO AVAILABLE ON REQUEST.
HOUSINGS AND FACE PLATES ARE STANDARD WHITE BUT, ARE ALSO AVAILABLE IN BLACK ON REQUEST.
VINYL LIGHT OPTIONS ARE ALSO AVAILABLE ON REQUEST

www.hyperpoolgroup.co.za



Description:
POOLMAID LED LIGHT 80 LED BLUE
Code:
CAT15/012



Description:
POOLMAID LED LIGHT 80 LED WHITE
Code:
CAT15/013



Description:
POOLMAID LED LIGHT COLOUR CHANGING
Code:
CAT15/014



Description:
EQ LIGHT TERMINAL CONNECTION KIT
Code:
(LED/R)



Description:
EQ LIGHT FACE PLATE

Code:
(QLS/05)



Description:
EQ LIGHT FACE BODY

Code:
(QLS/01)



Description:
EQ LIGHT STAINLESS STEEL SPRING
Code:
(QLS/07)



Description:
EQ LIGHT TERMINAL CAP COMPLETE
Code:
(QLS/09)



Description:
EQ LIGHT TERMINAL CAP O-RING

Code:
(QLS/10)



Description:
EQ LIGHT CABLE PER METER

Code:
(QLS/13)



Description:
EQ LIGHT GLAND NUT

Code:
(LQLS/15)



Description:
EQ LIGHT GLAND GROMMET

Code:
(QLS/16)



Description:
EQ LIGHT DECK BOX

Code:
(QLS/04)



Description:
EQ LIGHT FLAG TERMINAL

Code:
(QLS/14)



Description:
EQ LIGHT VINYL SEAL RING

Code:
(QLS/11)



Description:
EQ LIGHT VINYL LINER GASKET BIG

Code:
(QLS/12)



Description:
EG LIGHT VINYL LINER GASKET SMALL

Code:
(QLS/12A)



Description:
AQUA LIGHT FACE PLATE

Code:
(ALS/03)



Description:
AQUA LIGHT SWIVEL RING

Code:
(ALS/10)



Description:
AQUA LIGHT BLUE LENS

Code:
(QLS/01)



Description:
SWIMLINE FACE PLATE

Code:
(SLLS/04)



Description:
SWIMLINE SWIVEL RING

Code:
(SLLS/11)



Description:
SWIMLINE LENS BLUE

Code:
(SLLS/01)



Description:
SWIMLINE LENS SCREWS

Code:
(SLLS/03)

CODES:
THE SAME FOR ALL BRANCHES



Description:
TWO CHANNEL REMOTE

Code:
(LED/REM)



Description:
THREE CHANNEL REMOTE

Code:
(LED/REM1)



Description:
LIGHT SEAL BEAM 125W

Code:
(QLS/06)



Description:
LIGHT SEAL BEAM 300W

Code:
(ALS/06)

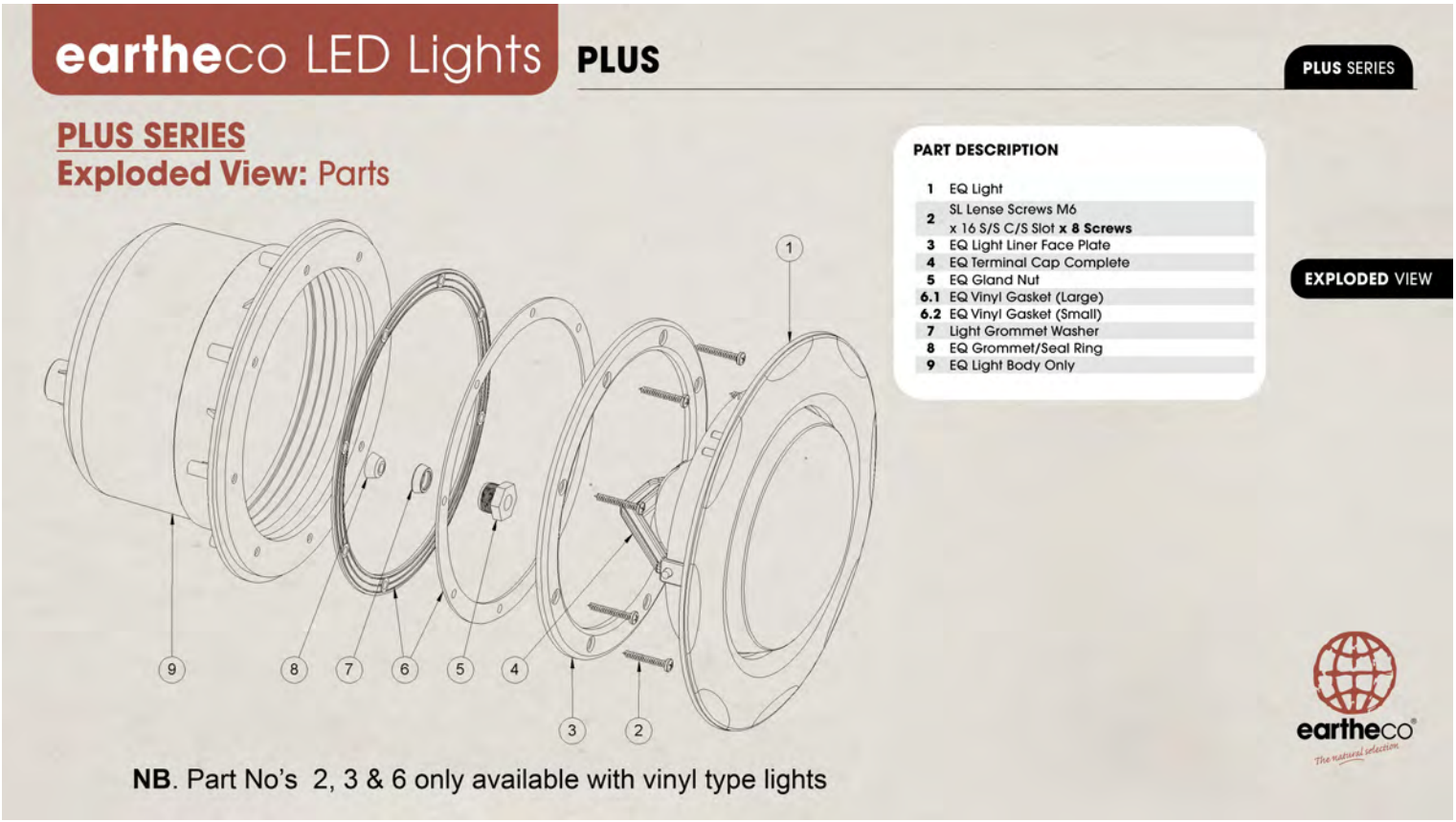



Description:
ELECTRICAL BOX BLACK
EMPTY
Code:
(EL/BBEMPTY)



Description:
ELECTRICAL BOX BLACK
18 V/A (MANUAL TIMER)
Code:
(ELEC/BB)



Description:
ELECTRICAL BOX BLACK
125 V/A (MANUAL TIMER)
Code:
(ELEC/B)



Description:
ELECTRICAL BOX BLACK
300 V/A (MANUAL TIMER)
Code:
(ELEC/B0)



Description:
ELECTRICAL BOX WATER PROOF
EMPTY
Code:
(ELEC/D)



Description:
ELECTRICAL BOX WATER PROOF
18 V/A (MANUAL TIMER)
Code:
(ELEC/BIL)



Description:
ELECTRICAL BOX WATER PROOF
125 V/A (MANUAL TIMER)
Code:
(ELEC/BI)



Description:
ELECTRICAL BOX WATER PROOF
125 V/A (DIGITALTIMER)
Code:
(ELEC/B1A)



Description:
ISOLATOR
32A
Code:
(C1)



Description:
CIRCUIT BREAKER
6A
Code:
(C/6)



Description:
CIRCUIT BREAKER
16A
Code:
(C/16)



Description:
CIRCUIT BREAKER
20A
Code:
(C)



Description:
MINI CONTACTOR
4KW
Code:
(E/B009.10)



Description:
PVC GLAND

Code:
(E/GLAND)



Description:
TWO WAY AIR SWITCH

Code:
(SPA/AS2)



Description:
PRESURE FLOW SWITCH

Code:
(SPA/PS)



Description:
BELL TRANSFORMER
130V-12V-8V
Code:
(TRANS5)



Description:
TRANSFORMER
18V/A
Code:
(TRANS3)



Description:
TRANSFORMER
125V/A
Code:
(TRANS)



Description:
TRANSFORMER
300V/A
Code:
(TRANS1)



Description:
TIMER MANUAL
230V
Code:
(TIME/S1)



Description:
TIMER DIGITAL
230V
Code:
(TIME/DIG)



Description:
TIMER DIN
230V
Code:
(TIME/S)



Description:
TIMER UNIVERSAL
230V
Code:
(TIME/UNI)



Description:
EQ WEIR GUNITE COMPLETE WHITE
Code:
(QW/01A)



Description:
EQ WEIR GUNITE COMPLETE BLACK
Code:
(QW/01B)



Description:
EQ WEIR VINYL COMPLETE WHITE
Code:
(QW/03A)



Description:
EQ WEIR VINYL COMPLETE BLACK
Code:
(QW/03A)



Description:
EQ WEIR DECK LID

Code:
(QW/04)



Description:
EQ WEIR DECK COLLAR

Code:
(QW/03)



Description:
EQ WEIR BASKET

Code:
(QW/01)



Description:
EQ WEIR VAC LID

Code:
(QW/06A)



Description:
EQ WEIR CUFF

Code:
(QW/02)

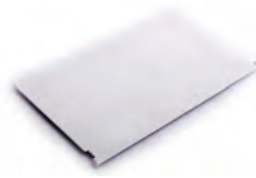

Description:
EQ WEIR FLAP

Code:
(QW/05)



Description:
STEALTH FILTER BUDDY CLEAR VAC LID
Code:
(QW/06)



Description:
EQ VINAL WEIR EXTENTION

Code:
(QW/WE)

WEIRS & SPARES

CODES:
THE SAME FOR ALL BRANCHES



Description:
AQUA WEIR DECK LID(EQ)

Code:
(AWS/01)

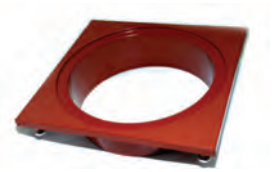

Description:
AQUA WEIR DECK COLLAR(EQ)

Code:
(AWS/02)



Description:
AQUA WEIR BASKET(EQ)

Code:
(AWS/03)



Description:
AQUA WEIR VAC LID(EQ)

Code:
(AWS/05)



Description:
SWIMLINE WEIR DECK LID(EQ)

Code:
(SL/WS06)



Description:
SWIMLINE WEIR DECK COLLAR (EQ)
Code:
(SL/WS05)



Description:
SWIMLINE WEIR BASKET(EQ)

Code:
(SL/WS02)



Description:
SWIMLINE WEIR VAC LID(EQ)

Code:
(SL/WS13)



Description:
SWIMLINE WEIR FLAP

Code:
(SL/WS03)



Description:
EQ VINYL WEIR SPARES ARE ALSO AVAILABLE ENQUIRE WITH YOUR SALES REPRESENTATIVE



Description:
AQUA WEIR LUGS

Code:
(AWS/08)



Description:
EQ VINYL WEIR FACE PLATE OUTER
Code:
(QW/07A)



Description:
AUTO FILLING WEIR

Code:
(AW/03)



Description:
AUTO FILLING WEIR VALVE ONLY

Code:
(AUTO)



Description:
SWIMQUIP WEIR BASKET YELLOW

Code:
(BAS/02)



Description:
POOLQUIP VAC LID

Code:
(PQWS/01)



Description:
POOLQUIP VAC LID O-RING

Code:
(PQWS/03)



Description:
POOLQUIP WEIR BASKET ROUND

Code:
(PQWS/02)



Description:
SPECK VACK LID

Code:
(SP/VL)



Description:
SPECK WEIR BASKET

Code:
(SP/WB)

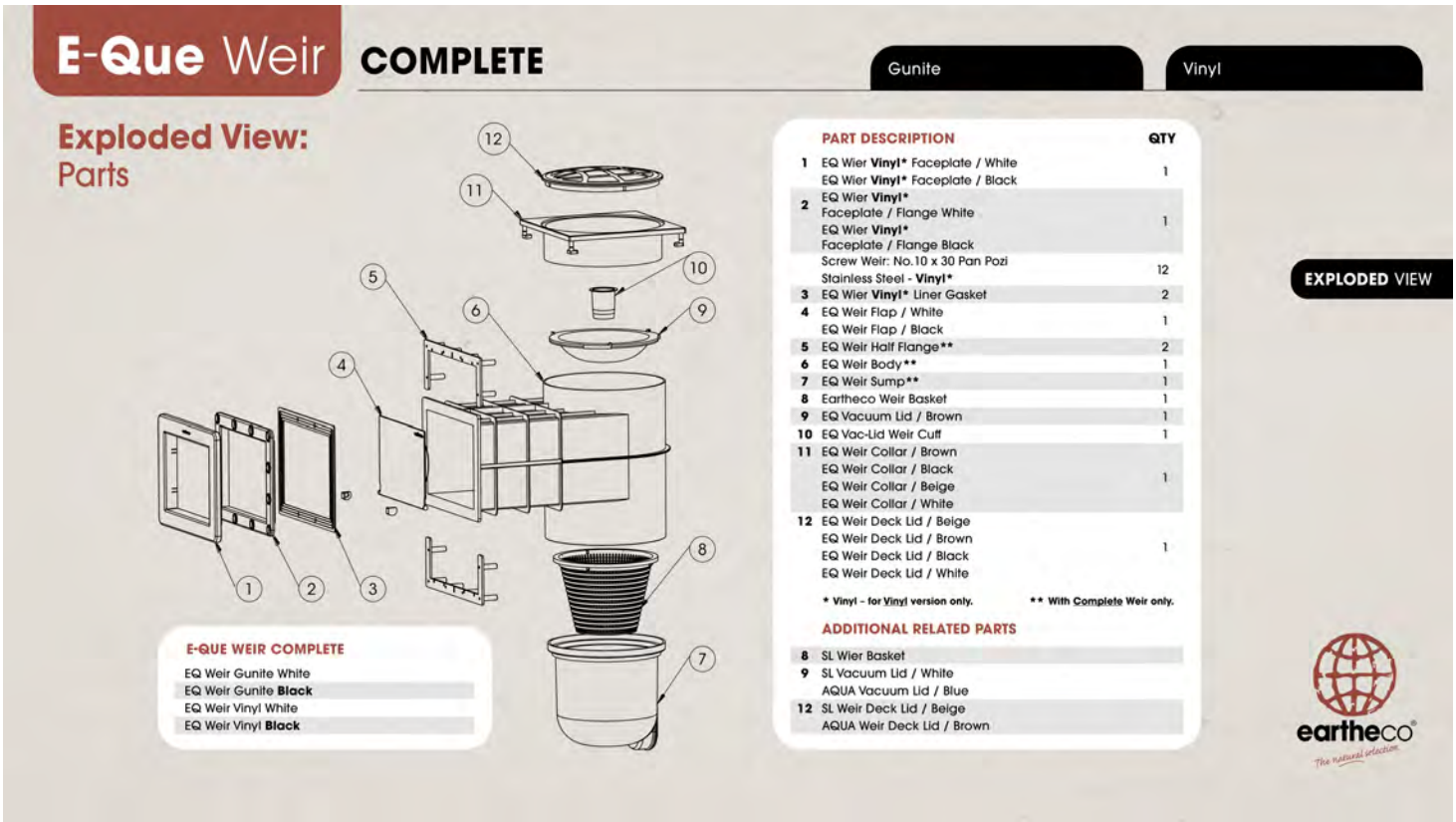



Description:
COLLINS FILTER TOP

Code:
(COL/FS02)



Description:
COLLINS FILTER TOP O-RING

Code:
(COL/FS02A)



Description:
COLLINS MPV TOP ONLY

Code:
(COL/FS03)



Description:
COLLINS MPV BODY

Code:
(COL/FS02)



Description:
COLLINS FILTER FINGER
P18
Code:
(COL/FS06)



Description:
COLLINS FILTER FINGER
P24
Code:
(COL/FS07)



Description:
COLLINS FILTER FINGER
P30
Code:
(COL/FS08)



Description:
COLLINS VALVE COVER

Code:
(COL/MC)



Description:
COLLINS LIGHT NICHE COLLAR

Code:
(COL/LS02)



Description:
COLLINS LIGHT NICHE TOP LID

Code:
(COL/LS01)



Description:
COLLINS WAGON WHEEL GASKET

Code:
(COL/M01)



Description:
COLLINS OVAL LID

Code:
(COL/OVC)



Description:
COLLINS OVAL LID(EQ)

Code:
(COL/OVE)



Description:
COLLINS OVAL LID GASKET

Code:
(COL/OLG)



Description:
COLLINS OVAL LID CROSS BAR

Code:
(COL/FS02)



Description:
COLLINS TOP SPANNER

Code:
(COL/S)



Description:
COLLINS SIGHT GLASS & O-RING

Code:
(COL/SG)



Description:
COLLINS WEIR VAC LID SMALL (MK2)
Code:
(COL/AVL)



Description:
COLLINS WEIR VAC LID LARGE (MK1)
Code:
(COL/WS02)



Description:
COLLINS WEIR FLAP BIG COMPLETE
Code:
(COL/WS04)



Description:
COLLINS WEIR FLAP SMALL COMPLETE
Code:
(COL/WS05)

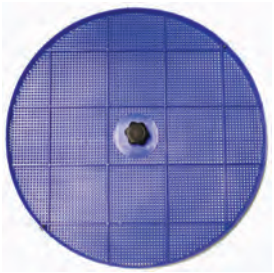

Description:
COLLINS SKIM FILTER BASKET BLUE
Code:
(COL/WS06)



Description:
COLLINS VAC LID RELEASE VALVE

Code:
(COL/WS08)



Description:
COLLINS BREATHER FITTING COMPLETE
Code:
(COL/WS11)



Description:
COLLINS BREATHER FITTING CAP
Code:
(COL/WS09A)



Description:
COLLINS BREATHER FITTING NUT
Code:
(COL/WS09)



Description:
COLLINS WEIR DECK COLLAR BIG
Code:
(COL/WS12)



Description:
COLLINS WEIR DECK COLLAR SMALL
Code:
(COL/WS12A)



Description:
COLLINS WEIR DECL LID LARGE (MK2)
Code:
(COL/WS13)



Description:
COLLINS WEIR DECL LID SMALL (MK1)
Code:
(COL/WS13A)



Description:
COLLINS SKIM FILTER TOP
Code:
(COL/WS13B)



Description:
COLLINS WEIR FLAP SPRING SMALL
Code:
(COL/WS14)



Description:
COLLINS WEIR FLAP SPRING LARGE
Code:
(COL/WS17)



Description:
COLLINS VAC LID GASKET SMALL (MK2)
Code:
(COL/FS15)



Description:
COLLINS VAC LID GASKET BIG
Code:
(COL/WS16)



Description:
COLLINS WEIR BASKET SMALL
Code:
(COL/WS01)



Description:
AQUAKING XPLORER
COMBI
Code:
(AQUA/EXPLORER)



Description:
AQUAKING XPLORER
HEAD ONLY
Code:
(AQUA/EH)



Description:
AQUAKING XPLORER
BUMPER
Code:
(AQUA/XB)



Description:
AQUAKING XPLORER
MAINTENANCE PACK
Code:
(AQUA/XMK)



Description:
AQUAKING XPLORER
FLAP
Code:
(AQUA/XF)



Description:
AQUAKING XPLORER FLOAT
Code:
(AQUA/EFA)



Description:
AQUAKING XPLORER
SWIVEL PACK
Code:
(AQUA/XS)



Description:
AQUAKING XPLORER
TRACKS (SET OF2)
Code:
(AQUA/T)



Description:
AQUAKING XPLORER
LEADER HOSE
Code:
(AQUA/XH)



Description:
AQUAKING ATLANTIS
COMBI
Code:
(AQUA1)



Description:
AQUAKING ATLANTIS
HEAD ONLY
Code:
(AQUA)



Description:
AQUAKING ATLANTIS
BUILDERS PACK
Code:
(AQUA/B)



Description:
AQUAKING ATLANTIS
SWIVEL KIT
Code:
(AQUA/SK)



Description:
AQUAKING ATLANTIS
FLOAT
Code:
CAT19/014 (AQUA/F)



Description:
AQUAKING ATLANTIS
FOOTPAD
Code:
CAT19/015 (AQUA/FP)



Description:
AQUAKING ATLANTIS
HAMMER
Code:
CAT19/016 (AQUA/H)



Description:
AQUAKING ATLANTIS
CLIP ON WEIGHT
Code:
(AQUA/HW)



Description:
AQUAKING ATLANTIS
SKIRT
Code:
CAT19/018 (AQUA/S)



Description:
AQUAKING ATLANTIS BUMPER
STRIP
Code:
CAT19/019 (VOY/BS)



Description:
AQUAKING ATLANTIS DEFLECTOR
WHEEL
Code:
CAT18/020 (VOY/DW)



Description:
AQUAKING ATLANTIS HAMMER
COVER PLATE
Code:
CAT18/021 (VOY/HC)



Description:
AQUAKING TURBO KING
HEAD ONLY
Code:
(AQUA/TKH)



Description:
AQUAKING TURBO KING
BUMPER STRIP
Code:
(STEALTH/B)



Description:
AQUAKING TURBO KING
WHEEL BLUE
Code:
(STEALTH/DW)



Description:
AQUAKING TURBO KING
FOOTPAD
Code:
(STEALTH/FP)



Description:
AQUAKING TURBO KING
HOSE WEIGHT
Code:
(STEALTH/HW)



Description:
AQUAKING TURBO KING
INNER TUBE
Code:
(STEALTH/IN)



Description:
AQUAKING TURBO KING
OUTER EXTENSION PIPE
Code:
(STEALTH/OUT)



Description:
AQUAKING TURBO KING
PLUNGER ENGINE UNIT
Code:
(STEALTH/P)



Description:
AQUAKING TURBO KING
DISC
Code:
(STEALTH/S)



Description:
UNIVERSAL WEIR ADAPTOR

Code:
(UNIVER/WFA)



Description:
UNIVERSAL FINNED DISC
DARK BLUE
Code:
(UNIVER/D)



Description:
UNIVERSAL FINNED DISC
LIGHT BLUE
Code:
(UNIVER/D1)

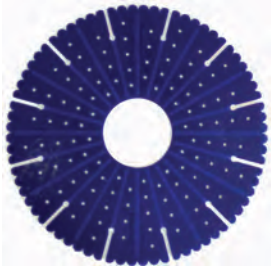

Description:
UNIVERSAL SCALLOPED DISC
BLUE
Code:
(UNIVER/SC)



Description:
UNIVERSAL DIAPHRAGM
STANDARD
Code:
(UNIVER/DI)



Description:
UNIVERSAL DIAPHRAGM
ROUND
Code:
(UNIVER/DI1)



Description:
UNIVERSAL EXTENSION PIPE
BLUE
Code:
(UNIVER/EX1)



Description:
UNIVERSAL EXTENSION PIPE
WHITE
Code:
(UNIVER/EX)



Description:
UNIVERSAL FLEXI FOOTPAD

Code:
(UNIVER/FP)



Description:
UNIVERSAL INNER TUBE

Code:
(UNIVER/IT)



Description:
UNIVERSAL RETAINING RING

Code:
(UNIVER/RR)



Description:
UNIVERSAL CONTROL VALVE

Code:
(UNIVER/CV)



Description:
UNIVERSAL HOSE WEIGHT

Code:
(UNIVER/HW)



Description:
UNIVERSAL HOSE FLOAT

Code:
(UNIVER/HF)



Description:
UNIVERSAL ROTATING WHEEL
WHITE
Code:
(UNIVER/RW)



Description:
UNIVERSAL EASY OUT

Code:
(UNIVER/E)



Description:
UNIVERSAL 90^0

Code:
(UNIVER/90)



Description:
UNIVERSAL 45^0

Code:
(UNIVER/45)



Description:
UNIVERSAL HOSE ADAPTOR
BLUE OR WHITE
Code:
(UNIVER/HCW)



Description:
UNIVERSAL SWIVEL (KREEPY)

Code:
(UNIVER/S)

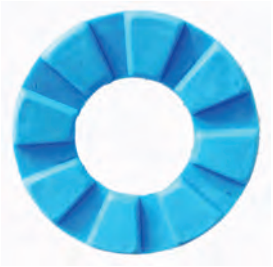

Description:
UNIVERSAL FOOTPAD
(KREEPY)
Code:
(UNIVERFP)



Description:
UNIVERSAL PLAIN DISC
(KREEPY)
Code:
(UNIVER/SD)



Description:
UNIVERSAL PLEATED DISC
(KREEPY)
Code:
(UNIVER/SD1)



Description:
VOYAGER HAMMER

Code:
(VOY/H)



Description:
VOYAGER WEIR ADAPTOR

Code:
(VOY/WA)



Description:
VOYAGER BUMPER STRIP

Code:
(VOY/BS)



Description:
VOYAGER SKIRT

Code:
(VOY/D)



Description:
AQUAKING UNIVERSAL HOSE
BLUE
Code:
(HOSE/B)



Description:
AQUAKING UNIVERSAL HOSE
WHITE
Code:
(HOSE/W)



Description:
AQUAKING UNIVERSAL HOSE
AQUA
Code:
(HOSE/A)



Description:
AQUAKING UNIVERSAL LEADER HOSE BLUE
Code:
(AQUA/XH)



Description:
AQUAKING UNIVERSAL LEADER HOSE WHITE
Code:
(VOY/LH)



Description:
GEMINI BUMPER STRIP

Code:
(GEM/BS)



Description:
GEMINI SKIRT

Code:
(GEM/D)



Description:
GEMINI HAMMER COVER PLATE

Code:
(GEM/HP)



Description:
GEMINI SWIVEL UNIT

Code:
(GEM/S)



Description:
GEMINI FOOTPAD

Code:
(GF)



Description:
GEMINI FLOAT ARM LONG

Code:
(GFA)



Description:
GEMINI FLOAT ARM SHORT

Code:
(GFAS)



Description:
GEMINI FLOAT AXLE COMPLETE

Code:
(GFSB)



Description:
GEMINI HAMMER

Code:
(GH)



Description:
ACROBAT FLAT ARM

Code:
(UNIWER/FU)



Description:
ACROBAT DEFLECTOR WHEEL

Code:
(UNIVER/DR)



Description:
AQUAKING CHLORINATOR
M10 (35 000LT - 80 000LT)
STANDARD
Code:
(POOLM/10)

Description:
AQUAKING CHLORINATOR
M15 (80 000LT - 100 000LT)
STANDARD
Code:
(POOLM/15)



Description:
AQUAKING ELECTRODE REPLACE-
MENT PLATE TITANIUM COATED
Code:
(POOLM/CP)



Description:
AQUAKING CHLORINATOR
S5 (10 000LT - 25 000LT)
LOW MAINTENANCE
Code:
(POOLM/5)

Description:
AQUAKING CHLORINATOR
S8 (25 000LT - 50 000LT)
LOW MAINTENANCE
Code:
(POOLM/8)

Description:
AQUAKING CHLORINATOR
S11 (50 000LT - 80 000LT)
LOW MAINTENANCE
Code:
(POOLM/11)

Description:
AQUAKING CHLORINATOR
S14 (80 000LT - 100 000LT)
LOW MAINTENANCE
Code:
(POOLM/14)

Description:
AQUAKING CHLORINATOR
S18 (100 000LT - 120 000LT)
LOW MAINTENANCE
Code:
(POOLM/18)



Description:
AQUAKING CHLORINATOR ELEC-
TRODE COMPLETE M10
Code:
(POOLM/C10)

Description:
AQUAKING CHLORINATOR ELEC-
TRODE COMPLETE M15
Code:
(POOLM/C10)

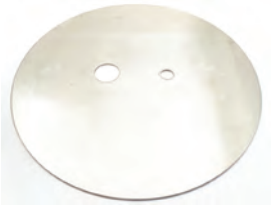

Description:
AQUAKING ELECTRODE REPLACE-
MENT PLATE STAINLESS STEEL
Code:
(POOLM/SS)



Description:
AQUAKING CHLORINATOR ELEC-
TRODE COMPLETE S5
Code:
(POOLM/5A)

Description:
AQUAKING CHLORINATOR ELEC-
TRODE COMPLETE S8
Code:
(POOLM/8A)

Description:
AQUAKING CHLORINATOR ELEC-
TRODE COMPLETE S11
Code:
(POOLM/11A)

Description:
AQUAKING CHLORINATOR ELEC-
TRODE COMPLETE S14
Code:
(POOLM/14A)

Description:
AQUAKING CHLORINATOR ELEC-
TRODE COMPLETE
Code:
(POOLM/18A)



Description:
AQUAKING HEAT PUMP
5,3KW (0- 35 000 LT)
Code:
(POOLH/5)

Description:
AQUAKING HEAT PUMP
7,8KW (0- 40 000 LT)
Code:
(POOLH/7)

Description:
AQUAKING HEAT PUMP
9,5KW (0- 55 000 LT)
Code:
(POOLH/9)

Description:
AQUAKING HEAT PUMP
11,3KW (0- 70 000 LT)
Code:
(POOLH/11)

Description:
AQUAKING HEAT PUMP
17KW (0- 100 000 LT)
Code:
(POOLH/17)



Description:
AQUAKING HEAT PUMP DISPLAY
OLD TYPE
Code:
(POOLH/DU1)



Description:
AQUAKING HEAT PUMP DISPLAY
NEW TYPE
Code:
(POOLH/DU)



Description:
AQUAKING HEAT PUMP
UNION
Code:
(POOLH/U)

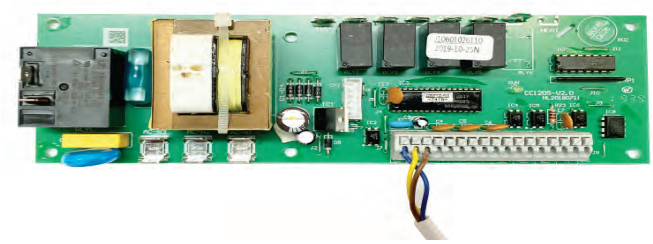

Description:
AQUAKING HEAT PUMP PC BOARD
OLD TYPE
Code:
(POOLH/PC)



Description:
AQUAKING HEAT PUMP PC BOARD
NEW TYPE
Code:
(POOLH/PC1)



Description:
AQUAKING HEAT PUMP
DISPLAY COVER
Code:
(POOLH/DC)



Description:
AQUAKING HEAT PUMP
SURGE PROTECTOR
Code:
(POOLH/VOL)



Description:
PRO SOLAR PANEL 3M

Code:
(SOL/SC)



Description:
SOLAR PANEL BACKING SHEET

Code:
(SOL/B)



Description:
SOLAR MAGIC SOLAR PANEL

Code:
(SOL/Q)

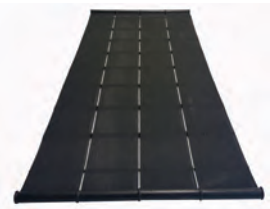

Description:
HELIOCOL SOLAR PANE

Code:
(SOL/HP)



Description:
SOLAR MAGIC HEDDER PIPE

Code:
(SOL/H)



Description:
SOLAR MAGIC HEDDER O-RING

Code:
(SOL/H0)



Description:
SOLAR REDUCING BUSH

Code:
(SOL/R)



Description:
VACUUM BREAKER

Code:
(SOL/VB1)



Description:
VACUUM BREAKER COMPLETE

Code:
(SOL/VC)



Description:
SOLAR WEBBING PER METER

Code:
(SOL/W)



Description:
SOLAR HOLDER BATS WHITE

Code:
(SOL/WC1)



Description:
SOLAR HOLDER BATS BLACK

Code:
(SOL/WC)



Description:
SOLAR Y-PIECE

Code:
(SOL/Y)



Description:
SOLAR BUBBLE BLANKET PER M^2
Code:
(S/BLANK2)



Description:
ROLL UP STATIONS (ORDERED FOR THE SIZE OF THE POOL)



Description:
SOLAR BLANKET CLIPS (MAIL & FEMALE)
Code:
(S/BLANK3)



Description:
SOLAR BUBBLE BLANKET STRAPS

Code:
(S/BLANK4)



Description:
SOLAR BLANKET STRAP LOCKS

Code:
(S/BLANK5)



Description:
SOLAR PANNEL KIT MADE TO ORDER



Description:
SOLAR PANEL CONNECTOR

Code:
(SOL/PC)



Description:
SAFETY NET HOOKS & PLATES

Code:
(S/NET07)



Description:
SAFETY NET HOOKS

Code:
(S/NET01)



Description:
SAFETY NET HOOKS INDUSTRIAL
Code:
(S/NET07A)



Description:
ECOSAVER TRANSPARENT POOL COVER
Code:
(ECOS)



Description:
SPA CARTRIDGE REFILL

Code:
(CART/05)



Description:
SPA CARTRIDGE COMPLETE

Code:
(CART/07)



Description:
SPA AIR CONTROL IMPORT

Code:
(SPA/AC3)



Description:
SPA AIR CONTROL SWIMLINE

Code:
(SPA/AC1)



Description:
SPA AIR SWITCH PIPE P/METER

Code:
(SPA/AP)



Description:
SPA SWITCH MUSHROOM

Code:
(SPA/M1)



Description:
SPA SWITCH BUTTON

Code:
(SPA/M3)



Description:
SPA SUCTION

Code:
(SPA/SPU)



Description:
SPA PILL DISPENCER

Code:
(SPA/D)



Description:
SLA JET
50/32
Code:
(PA/JP0)



Description:
SPA JET
32/32
Code:
(SPA/JPS)



Description:
SPA JET INNER
50/32
Code:
(SPA/INNER)



Description:
GUNITE JET

Code:
(SPA/GJ)



Description:
SPA FERRULES

Code:
(SPA/WF)



Description:
SPA HEATER CASE & YOLK BOB

Code:
(SPA/HC4)



Description:
SPA YOLK BOX

Code:
(SPA/YB)



Description:
SPA HEATER ELEMENT 2KW

Code:
(SPA/H2)



Description:
SPA HEATER ELEMENT 2KW
HARD WATER
Code:
(SPA/H2H)



Description:
SPA HEATER ELEMENT 3KW

Code:
(SPA/H)



Description:
SPA HEATER ELEMENT 3KW
HARD WATER
Code:
(SPA/HH)



Description:
SPA HEATER ELEMENT 4KW

Code:
(SPA/H1)



Description:
SPA HEATER ELEMENT 4KW
HARD WATER
Code:
(SPA/H3)



Description:
SPA THERMOSTAT PEN TYPE
0 TO 40^{0}C
Code:
(SPA/T)



Description:
SPA THERMOSTAT CURLY WHIRLY
0 TO 40^{0}C
Code:
(SPA/TC)

SPA

CODES:
THE SAME FOR ALL BRANCHES



Description:
SPA ALUMINIUM BLOWER

Code:
(SPA/AB)



Description:
SPA TWO WAY AIR SWITCH

Code:
(SPA/AS2)



Description:
SPA MINI CONTACTOR

Code:
(E/B009.10)



SAP DB BOXES ARE MADE TO SUIT THE SPECIFICATIONS OF THE SPECIFIC SPA, SPEAK TO YOUR REPRESENTATIVE FOR DETAILS.

SAND & SALT



Description:
SAND 40 KG

Code:
(SAND)



Description:
KOI SAND 40 KG
2 TO 4 MM
Code:
(SAND1)



Description:
KOI SAND 40 KG
3 TO 5 MM
Code:
(SAND8)



Description:
KOI SAND 40 KG
5 TO 7 MM
Code:
(SAND3)



Description:
SWIMMING POOL SALT 25KG

Code:
(SOUT)



Description:
ECO-FIBRE SWIMMING POOL FILTER MEDIUM
Code:
(ECO)



Description:
CLINOBRITE FILTER MEDIUM
25KG
Code:
(PRAT/CL)



Description:
CLINOFISH FILTER MEDIUM
25 KG
Code:
(PRAT/CLO)



Description:
POOLSKIM COMPLETE STANDARD
Code:
(P0)



Description:
POOLSKIM COMPLETE CUT DOWN
Code:
(P0/C)



Description:
POOLSKIM FITTING NEW
Code:
(P01)



Description:
POOLSKIM FITTING EQ
Code:
(P01C)



Description:
POOLSKIM FITTING POLQUIP
Code:
(P01A)



Description:
POLY POOLSKIM FITTING 50MM
Code:
(P01F)



Description:
POLY POOLSKIM FITTING 40MM
Code:
(P01E)



Description:
SANDED POOLSKIM FITTING
Code:
(P01D)



Description:
POOLSKIM HAT STANDARD
Code:
(P07)



Description:
POOLSKIM HAT CUT DOWN
Code:
(P07)



Description:
POOLSKIM BLUE RING
Code:
(P010)



Description:
POOLSKIM CLIP
Code:
(P05)



Description:
POOLSKIM 90⁰ FITTING

Code:
(P09)



Description:
POOLSKIM 45⁰ FITTING

Code:
(P011)



Description:
POOLSKIM BUNG

Code:
(P04)



Description:
POOLSKIM PIN

Code:
(P03)



Description:
POOLSKIM NET

Code:
(P02)



Description:
POOLSKIM SCREWS

Code:
(P08)



Description:
POOLSKIM HAT RESTRICTOR

Code:
(P06)

NOTE !
POOLSKIM'S AND SPARE ARE ALSO AVAILABLE IN BLACK, ENQUIRE WITH YOUR LOCAL REPRESENTATIVE FOR PRICING AND AVAILABILITY



Description:
GATORIN IN-LINE SKIMMER

Code:
(GAT)



Description:
GATOR SWIVEL

Code:
(GAT/S)



Description:
AQUAKING LEAF GOBBLER

Code:
(AQUA/LG)



Description:
AQUAKING LEAF GOBBLER BASKET

Code:
(AQUA/LGB)



Description:
BAILEY PVC CEMENT
50ML
Code:
(BAILEY50)



Description:
BAILEY PVC CEMENT
100ML
Code:
(BAILEY110)



Description:
BAILEY PVC CEMENT
118ML
Code:
(BAILEY118)



Description:
BAILEY PVC CEMENT
237ML
Code:
(BAILEY237)



Description:
BAILEY PVC CEMENT
473ML
Code:
(BAILEY473)



Description:
TANGIT PVC CEMENT
50ML
Code:
(TAN50)



Description:
TANGIT PVC CEMENT
100ML
Code:
(TAN100)



Description:
TANGIT PVC CEMENT
250ML
Code:
(TAN250)



Description:
TANGIT PVC CEMENT
500ML
Code:
(TAN500)



Description:
PATTEX CONTACT ADHESIVE
50ML
Code:
(PAT50)



Description:
PATTEX CONTACT ADHESIVE
100ML
Code:
(PAT100)



Description:
ECOGENE VINYL PATCH KIT

Code:
(V/PACH/K)



Description:
BRUSH 13MM

Code:
(KW/12)

Description:
BRUSH 25MM

Code:
(KW/25)

Description:
BRUSH 50MM

Code:
(KW/55)

Description:
BRUSH 140MM

Code:
(KW/140)

Description:
BRUSH 75MM

Code:
(KW/75)

Description:
BRUSH 100MM

Code:
(KW/100)



NOTE !

MAKE AND AVAILABILITY OF BRUSHES AND SIZES MAY VERY FROM BRANCH TO BRANCH, WHEN ORDERING PLEASE CONSULT WITH YOUR RELEVANT SALES CONSULTANT ON SPECIFIC CHOICES OR PREFRENCES IN BRUSH TYPES AND SIZES.



Description:
BRUSH 190MM
WIDE BLOCK
Code:
(KW/190)

Description:
RADIATOR BRUSH
75MM
Code:
(KW/RAD)



Description:
ROLLER HANDLE BIG
230MM
Code:
(ROL/H)

Description:
ROLLER HANDLE MEDIUM
1500MM
Code:
(ROL/H2)

Description:
ROLLER HANDLE SMALL
100MM
Code:
(ROL/H1)



Description:
ROLLER REFILL BIG
230MM
Code:
(ROL/R)



Description:
ROLLER REFILL MEDIUM
150MM
Code:
(ROL/R2)



Description:
ROLLER REFILL SMALL
100MM
Code:
(ROL/R1)



Description:
MUTTON CLOTH

Code:
(MUT)



Description:
CECROPS SANDING DISC
115MM
Code:
(S/DISC5)



Description:
CECROPS SANDING DISC
230MM
Code:
(S/DISC2)



Description:
BACKING PAD SMALL
115MM
Code:
(GIN/DP1)



Description:
BACKING PAD BIG
230MM
Code:
(GIN/DP)



Description:
CUTTING DISC SMALL
115MM
Code:
(C/DISC1)



Description:
CUTTING DISC BIG
230MM
Code:
(C/DISC)



Description:
SANDING DISC SMALL
115MM
Code:
(S/DISC1)



Description:
SANDING DISC BIG
230MM
Code:
(S/DISC)



Description:
LAMINATED FLAP SANDING DISC
115MM
Code:
(S/DISC3)



Description:
LAMINATED FLAP SANDING DISC
230MM
Code:
(S/DISC4)



Description:
DIAMOND CUTTING BLADE
115MM
Code:
(C/DISC4)



Description:
DIAMOND CUTTING BLADE
230MM
Code:
(C/DISC3)



Description:
PTFE TAPE BIG

Code:
(PTFE/1)



Description:
PTFE TAPE STANDARD

Code:
(PTFE/2)



Description:
MARBELITE TROWEL

Code:
(TROF/M)



Description:
WOODEN TROWEL

Code:
CAT27/031



Description:
PUTTY KNIFE 50MM

Code:
(P/K1)



Description:
PUTTY KNIFE 75MM

Code:
(P/K)



Description:
PUTTY KNIFE 100MM

Code:
(P/K3)



Description:
WIRE BRUSH

Code:
(WIR)



Description:
SILICONE GUN

Code:
(SILI/G1)



Description:
SILICONE REFILL

Code:
(SILI/H)



Description:
MARINE SILICONE REFILL

Code:
(SILI/M90)



Description:
PRATLEY POWDA BOND

Code:
(PRAT/B)



Description:
PRATLEY SP001

Code:
(PRAT/SP)



Description:
PRATLEY WONDA FIX

Code:
(PRAT/W)



Description:
PRATLEY QUICK SET

Code:
(PRAT1)



Description:
PRATLEY STANDARD

Code:
(PRAT)



Description:
MASKING TAPE 24MM X 40M

Code:
(MAS/01)



Description:
MASKING TAPE 36MM X 40M

Code:
(MAS/03)



Description:
MASKING TAPE 48MM X 40M

Code:
(MAS/04)



Description:
FLOATING CHLORINATOR BASKET

Code:
(FLC1)



Description:
POOL PILOT

Code:
(PP)



Description:
POOL GOBBLER REPLACEMENT BAGS
Code:
(PG)



Description:
BESTWAY REPLACEMENT FILTER CARTRIDGES I, II & III



Description:
BESTWAY REPLACEMENT HOSES

Code:
(58369)



Description:
BESTWAY ABOVE GROUND POOL REPLACEMENT PUMPS
Code:
(58386)



Description:
STAINLESS STEEL TWO STEP LADDER
Code:
CAT27/053



Description:
STAINLESS STEEL THREE STEP LADDER
Code:
(SL/L3)



Description:
STAINLESS STEEL FOUR STEP LADDER
Code:
(SL/L4)



Description:
FOR SWIMMING POOL TOYS AND ACCESSORIES PLEASE CONTACT YOUR SALES CONSULTANT FOR PRICE AND AVAILABILITY



Description:
UP THE POLE

Code:
(UTP)

CODES:
THE SAME FOR ALL BRANCHES

Bestway InflateYourFun™

BioGuard

Dolphin by maytronics

Emaux water technology

hth

KREEPY KRAULY
The best pool cleaning system in the world.

Quality POOL & SPA PRODUCTS

ZODIAC

NOTE !
FOR PRODUCT SUPPLIERS DISPLAYED ABOVE OR ANY OTHER POOL / SPA RELATED PRODUCT YOU MAY NEED CONTACT YOUR RELEVANT SALES CONSULTANT ON PRODUCT AND SPARES AVAILABILITY, AS WELL AS PRICING.

HPG

HYPER POOL GROUP

Everything for your Dream Pool & Spa

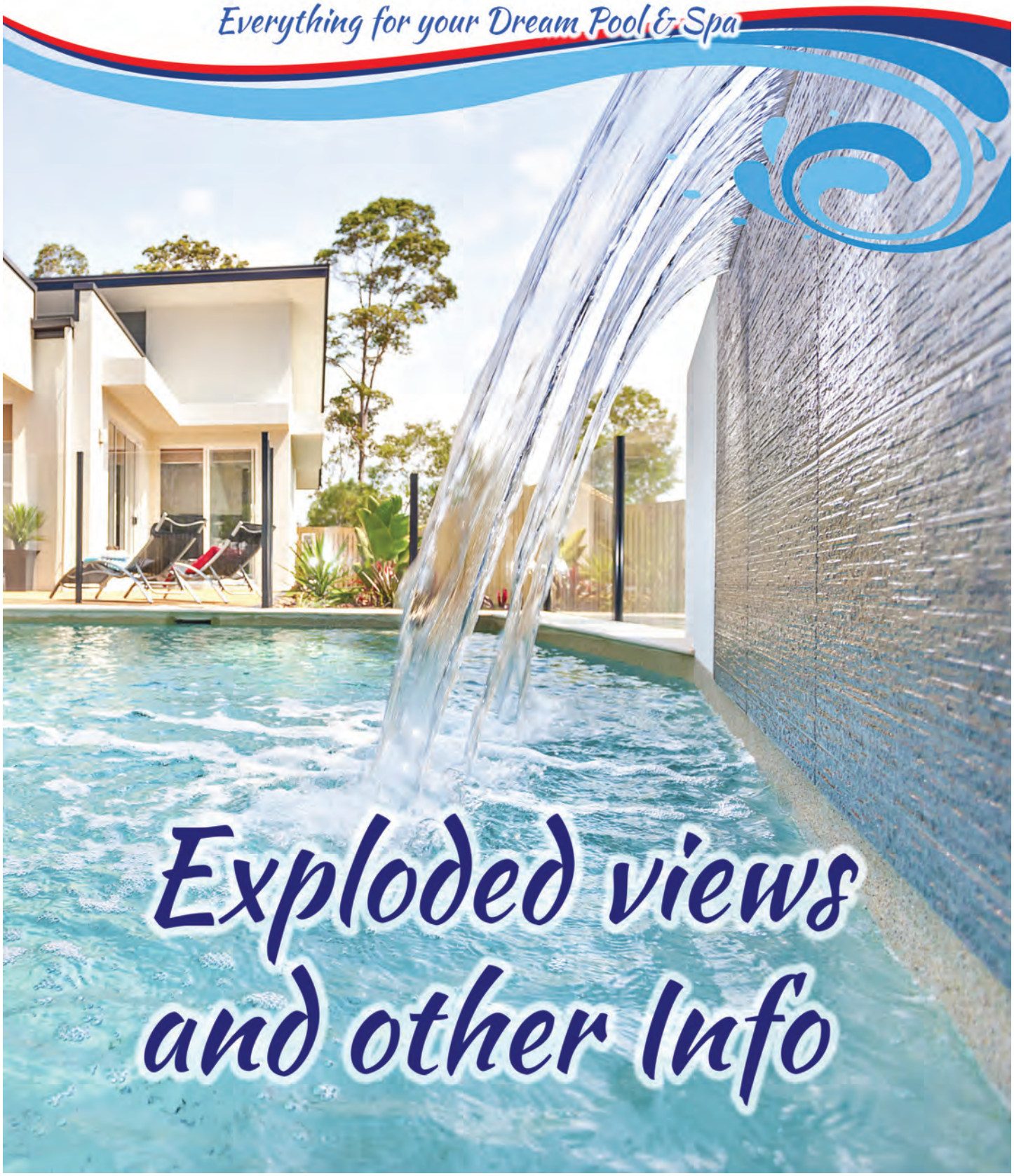

Exploded views and other Info

POOL CLEANERS

1 - AQUAKING ATLANTIS
2 - AQUAKING XPLORER
3 - ACROBAT
4 - BARACUDA MX-8
5 - BARACUDA MX-6
6 - GEMINI
7 - BARACUDA G2
8 - BARACUDA PACER
9 - BARACUDA GENIUS
10- KREEPY KRAULY ORIGINAL
11- KREEPY KRAULY DOMINATOR
12 - KREEPY KRAULY DOMINATOR LITE
13 - KREEPY KRAULY HUG BUG
14 - KREEPY KRAULY BULL SHARK

OTHER IMPORTANT EQUIPMENT INFORMATION

1 - SWIMMING POOL LAYOUT
2 - WIRING DIAGRAM - UNIVERSAL TIMER
3 - WIRING DIAGRAM - MANUAL TIMER - ACDC
4 - WIRING DIAGRAM - MANUAL TIMER - GRASSLIN
5 - WIRING DIAGRAM - DIGITAL TIMER - MCE
6 - WIRING DIAGRAM - DIN TIMER - ACDC
7 - WIRING DIAGRAM - DIN TIMER - MCE
8 - HEAT PUMP INSTALLATION
9 - CHLORINATOR INSTALLATION
10 - SOLAR INSTALLATION
11 - BRANCHES INFORMATION

1 - AquaKing Atlantis Exploded view

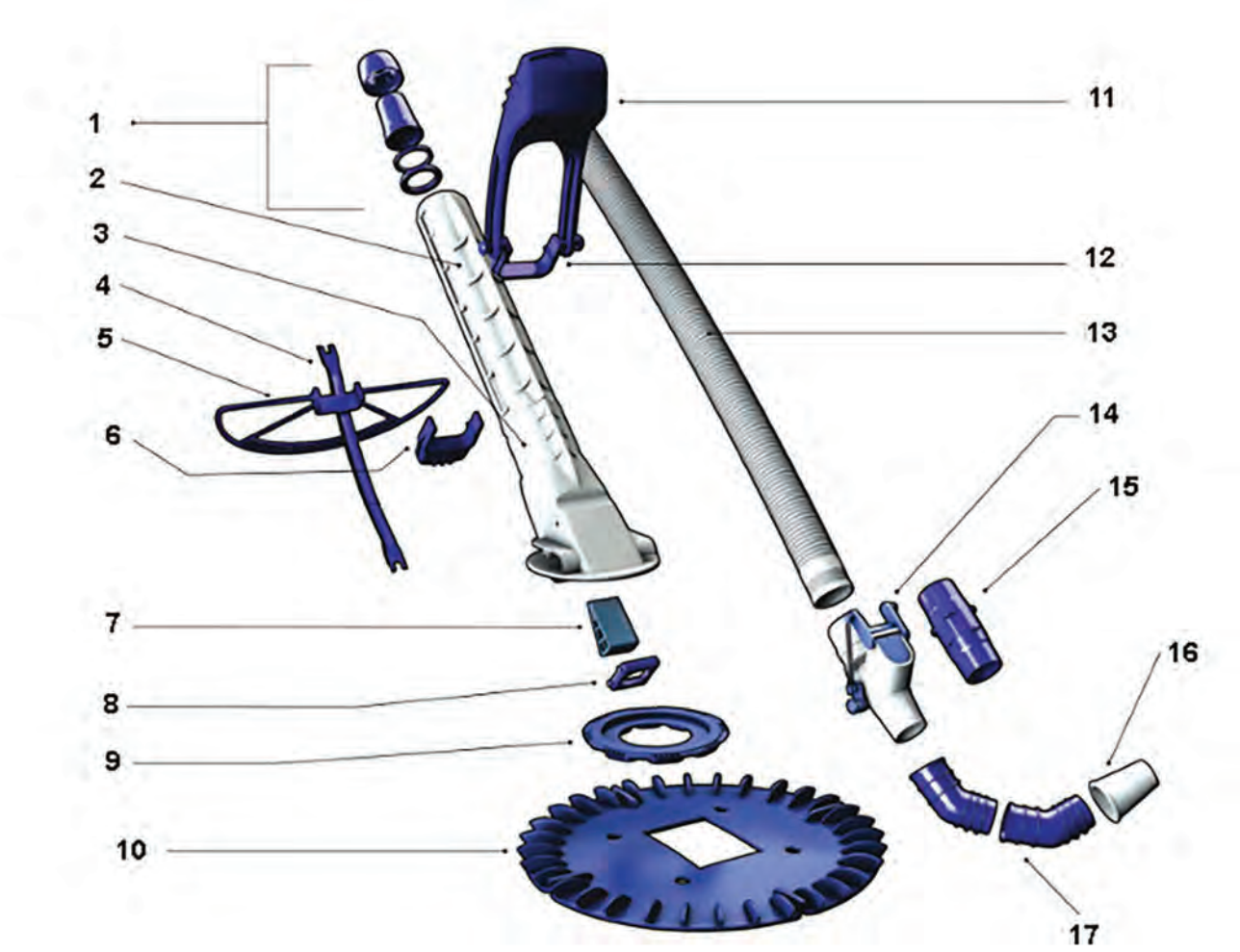

NO	Description	NO	Description
1	Swivel unit	10	Finned disc
2	Main body top	11	Clip on float
3	Main body bottom	12	Clip on Float swivel
4	Bumper strip	13	Replacement hose
5	Deflector wheel	14	Weir valve
6	Clip on weight	15	Hose connector
7	Hammer	16	Weir adaptor
8	Hammer cover plate	17	45^0 weir fitting
9	Footpad		

2 - Aquaking Xlorer Components

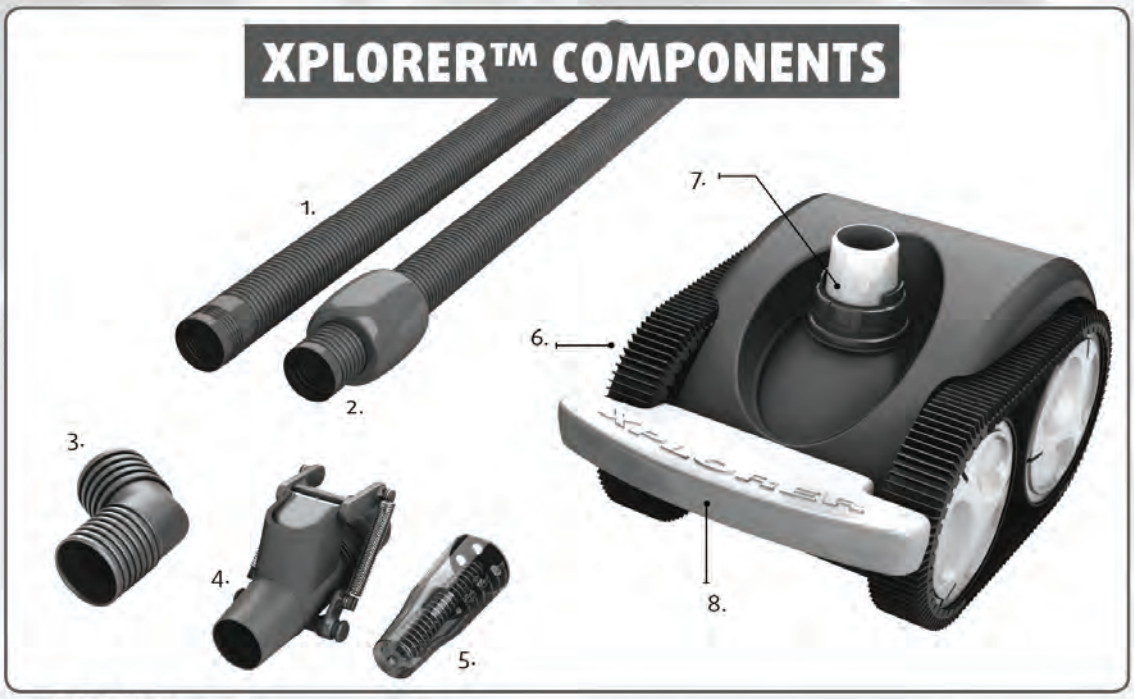

PARTS LIST:

1. Hose
2. Leader hose with float
3. 45° elbow
4. Flow Control Valve
5. Flow Meter
6. Track
7. Swivel kit
8. Bumper



PARTS LIST:

1. Hose
2. Track
3. Swivel kit
4. Bumper

3 - Acrobat Exploded view

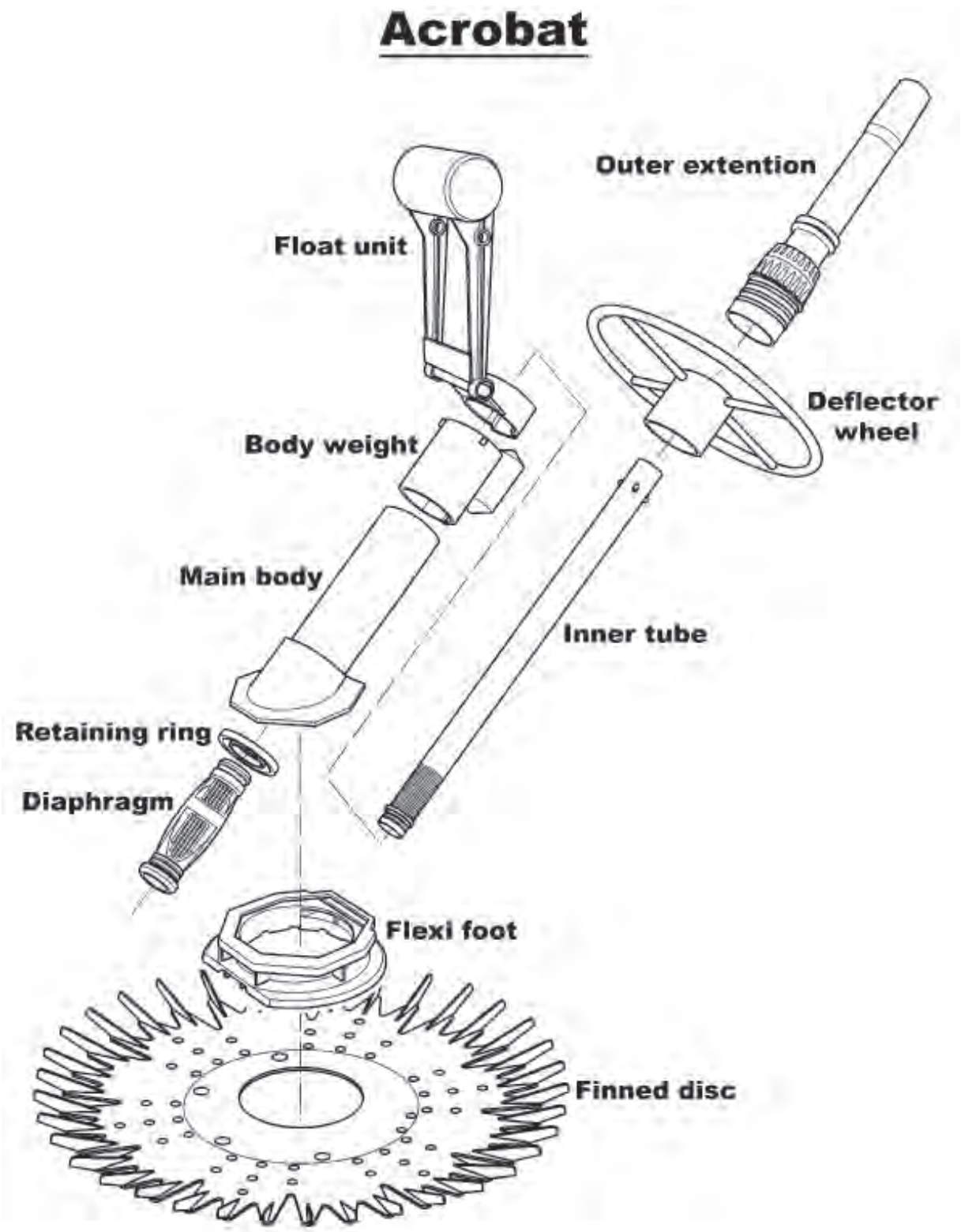

4 - Daracuda MX 8 Exploded View

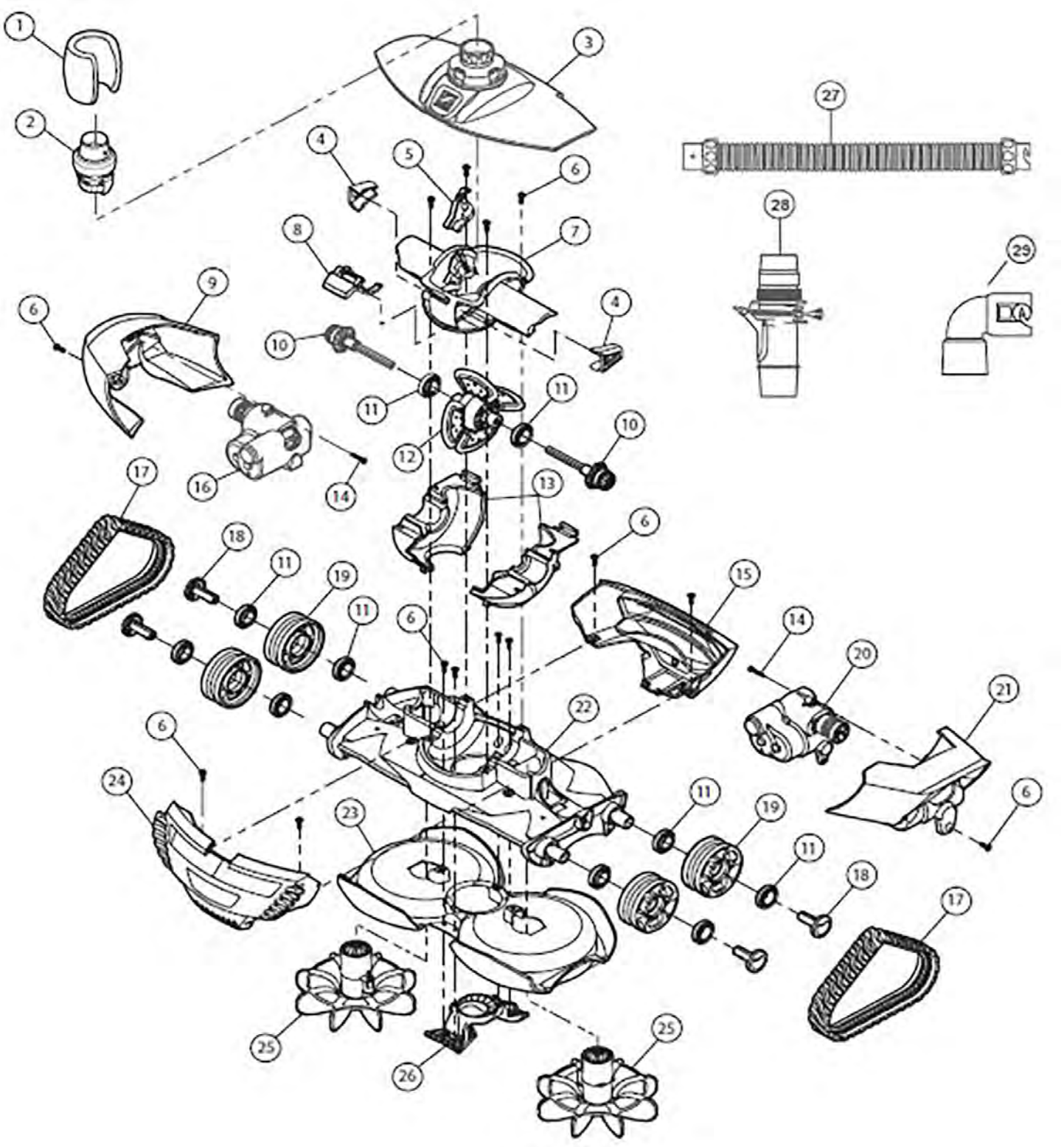

4 - Baracuda MX 8 Parts

No.	Description	Qty
1	Hose Float	1
2	Flow Regulator Valve	1
3	Top Cover W/Swivel Assembly	1
4	Engine Seal	2
5	Engine Guide	1
6	Screw, M4x12mm, Phillips #2 Pan Head	16
7	Upper Engine Housing	1
8	Yellow Button	1
9	Body Panel - Right (B)	1
10	Drive Shaft Assembly	2
11	Bearing, (Wheel & Engine)	10
12	Engine Assembly	1
13	Lower Engine Housing	1
14	Screw, Thread Forming, #6-18 7/8in Type A, Phillips #2 Pan Head	2
15	Body Panel - Rear (D)	1
16	Gear Box - Side B	1
17	Track	2
18	Wheel Pin	4
19	Wheel	4
20	Gear Box - Side A	1
21	Body Panel - Left (A)	1
22	Chassis Assembly	1
23	Lower Body Housing	1
24	Body Panel - Front (C)	1
25	Fan Assembly	2
26	Inlet Assembly	1
27	Pearl Blue Twist Lock Hose - 1.2m	8
28	Auto Weir Valve	1
29	90° Twist Lock Elbow	1

5 - Baracuda MX6 Exploded View

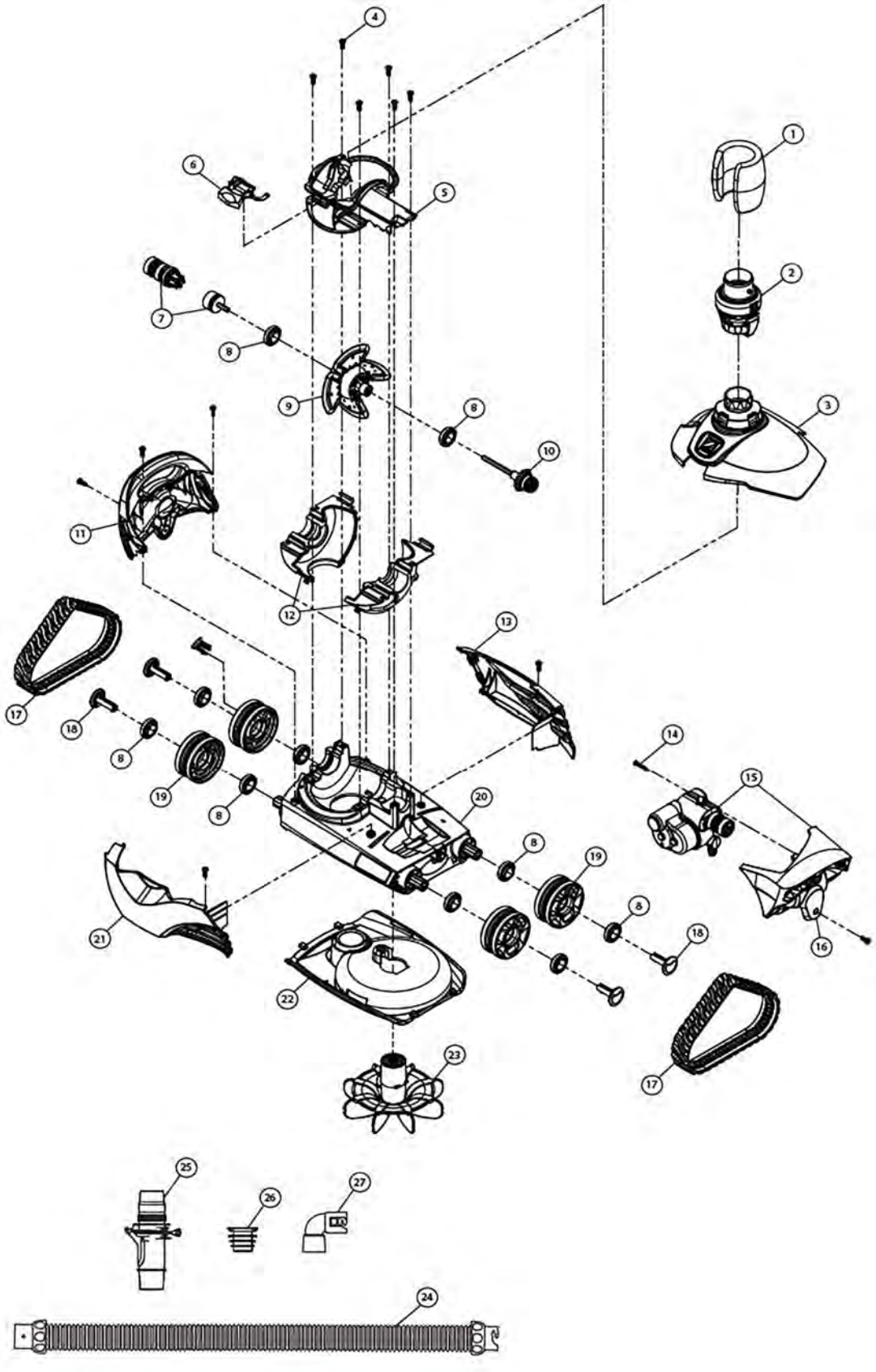

5 - Baracuda MX6 Parts

No	No Description	Qty
1	Hose Float	1
2	Flow Regulator Valve	1
3	Top Cover W/Swivel Assembly	1
4	Screw, M4x12mm, Phillips #2 Pan Head	10
5	Middle Engine HousingW/Ramp & 2 Seals	1
6	Cover Latch	1
7	Pulley Coupler Assembly	1
8	Bearing (Wheel & Engine)	10
9	Engine Assembly	1
10	Drive Shaft Assembly	1
11	Body Panel, Right (D)	1
12	Lower Engine Housing	1
13	Body Panel, Rear (B)	1
14	Screw, Thread Forming, #6-18 7/8in Type A, Phillips #2 Pan Head	1
15	Direction Control Device, Side A	1
16	Body Panel, Left (C)	1
17	Track	2
18	Wheel Pin	4
19	Wheel	4
20	Chassis Assembly	1
21	Body Panel, Front (A)	1
22	Lower Body Housing	1
23	Fan Assembly	1
24	Pearl Blue Twist Lock Hose - 1.2m	7
25	Auto Weir Valve	1
26	In-ground Valve Cuff	1
27	90° Twist Lock Elbow	1

6 - Gemini : Wheely/Twinsweep

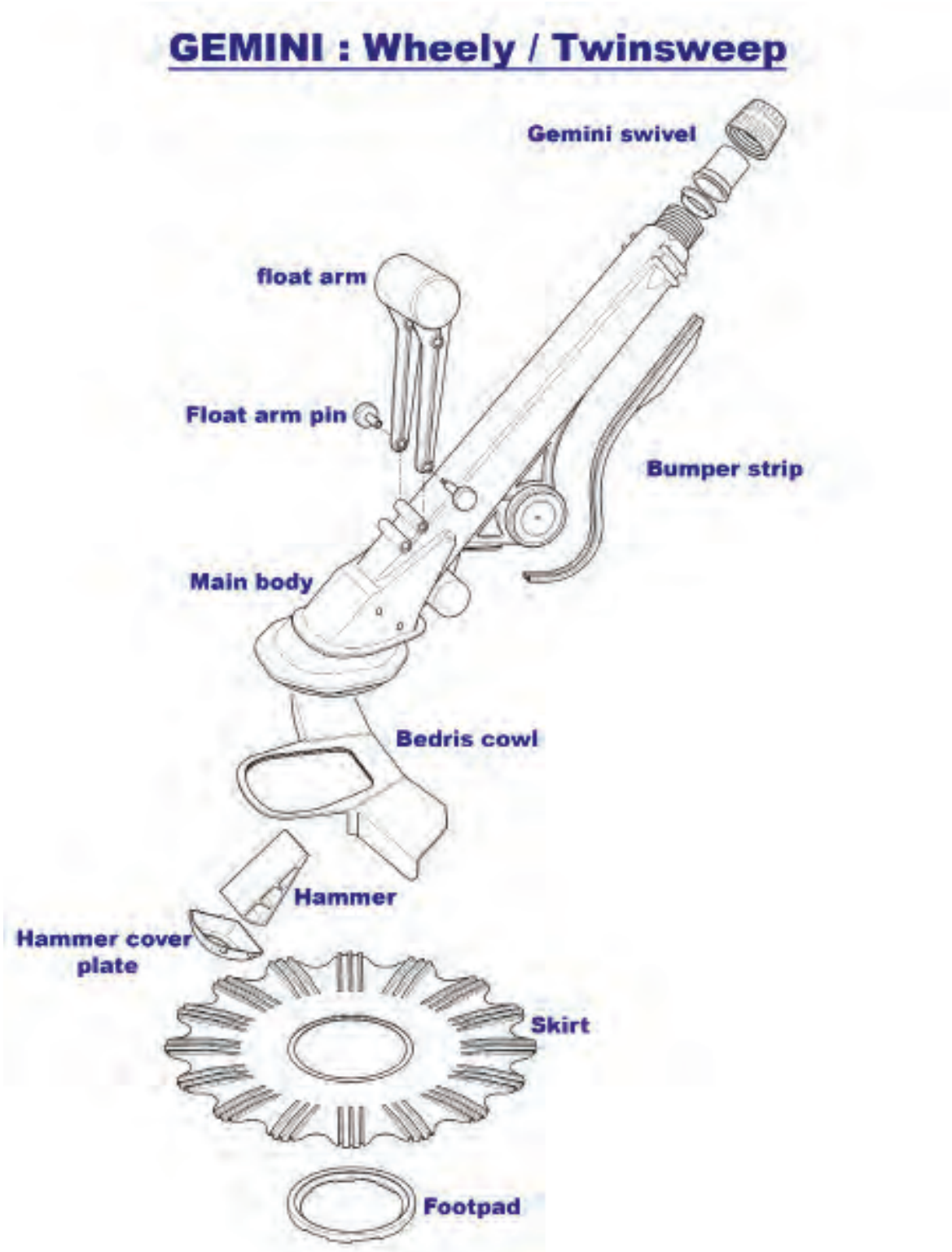

7 - Baracuda G2 Exploded view

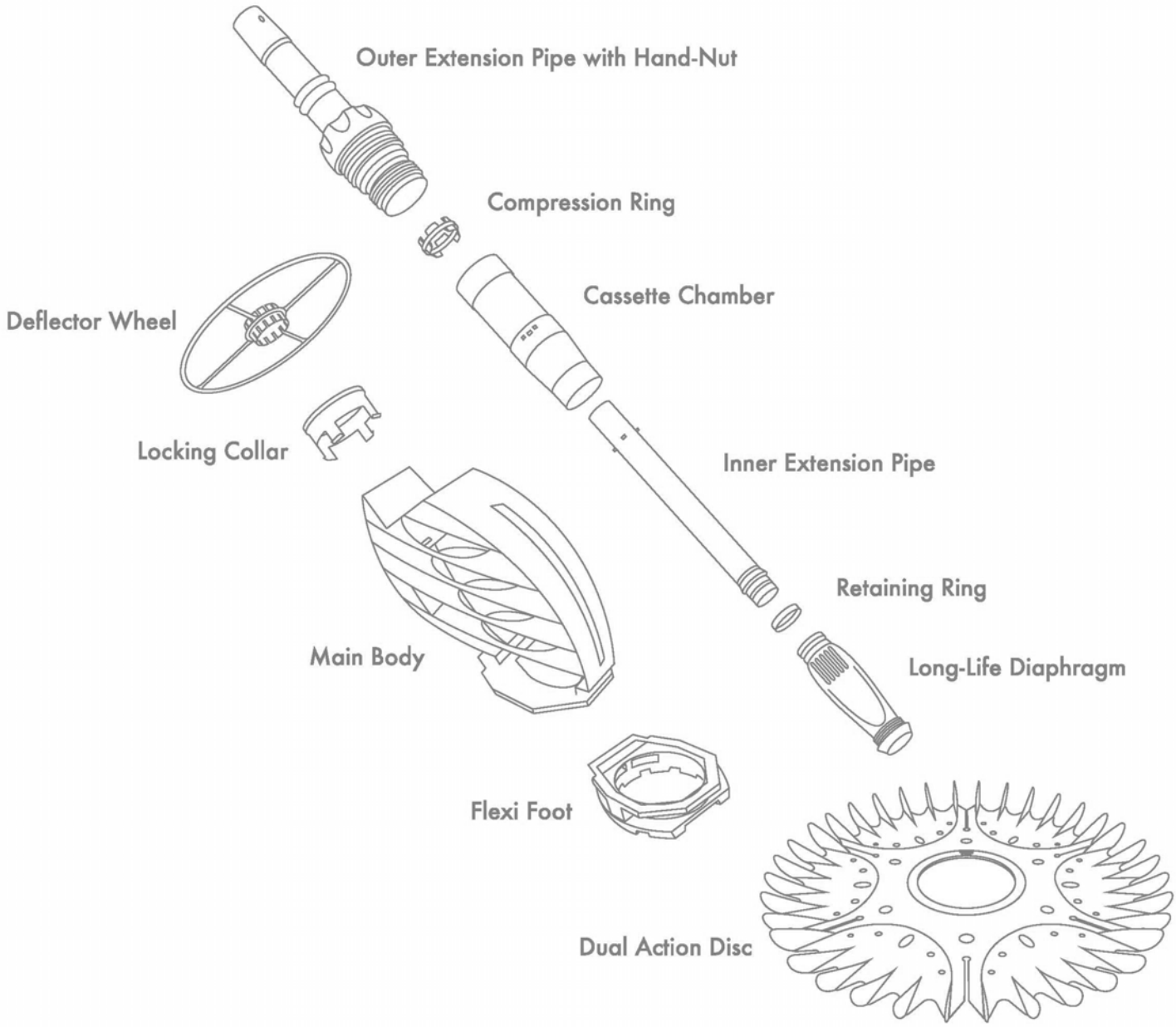

8 - Baracuda Pacer Exploded view

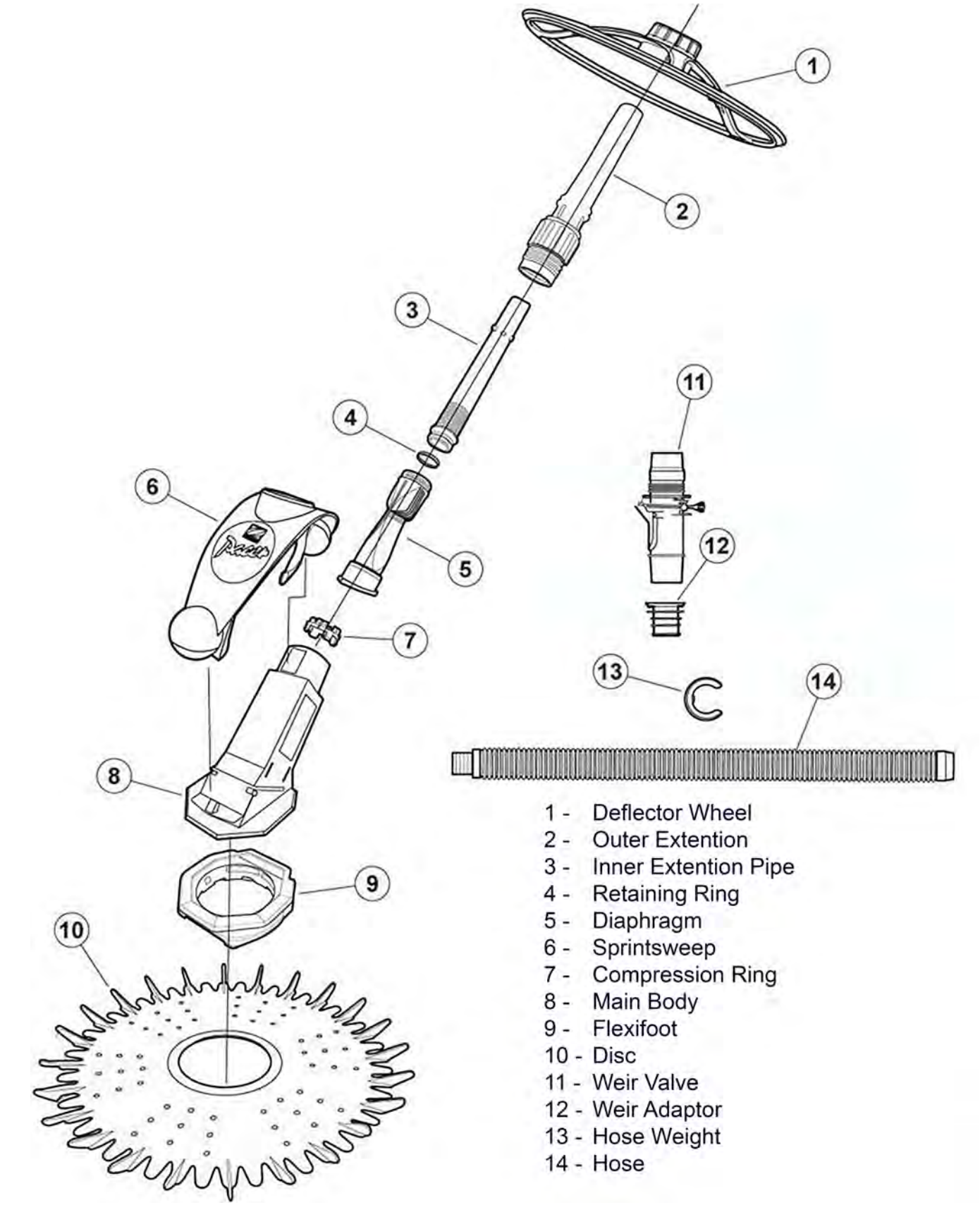

1 - Deflector Wheel
2 - Outer Extention
3 - Inner Extention Pipe
4 - Retaining Ring
5 - Diaphragm
6 - Sprintsweep
7 - Compression Ring
8 - Main Body
9 - Flexifoot
10 - Disc
11 - Weir Valve
12 - Weir Adaptor
13 - Hose Weight
14 - Hose

9 - Baracuda Genius Exploded view

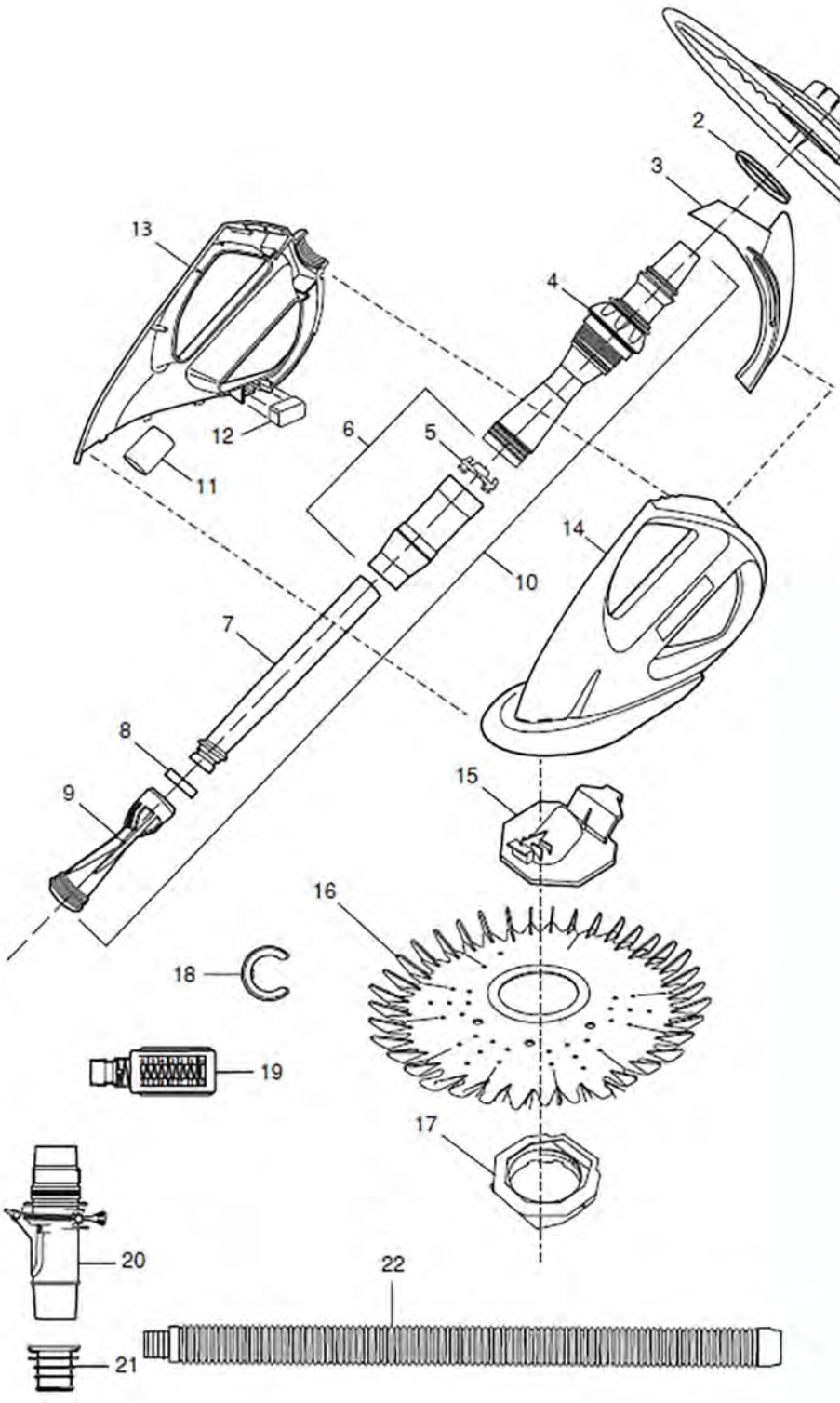

No.	Description	Qty.
1	Wheel Deflector	1
2	Retaining Collar	1
3	Bumper Fin, G3	1
4	Cassette Outer Extension Pipe w/ Handnut	1
5	Compression Ring	1
6	Assy, G3 Cass. Chamber w/ Comp Ring	1
7	Inner Extension Pipe	1
8	Retaining Ring	1
9	Diaphragm	1
10	Cassette Assy Complete	1
11	Float	1
12	Weight	1
13	Right G3 Main Body	1
14	Left G3 Main Body	1
15	Foot Flange	1
16	Finned Disc	1
17	Foot Pad	1
18	Hose Weight	1
19	Flow Gauge	1
20	Weir Valve	1
21	Weir Adaptor	1
22	Long-Life Hose	1

10 - Kreepy Krauly Original

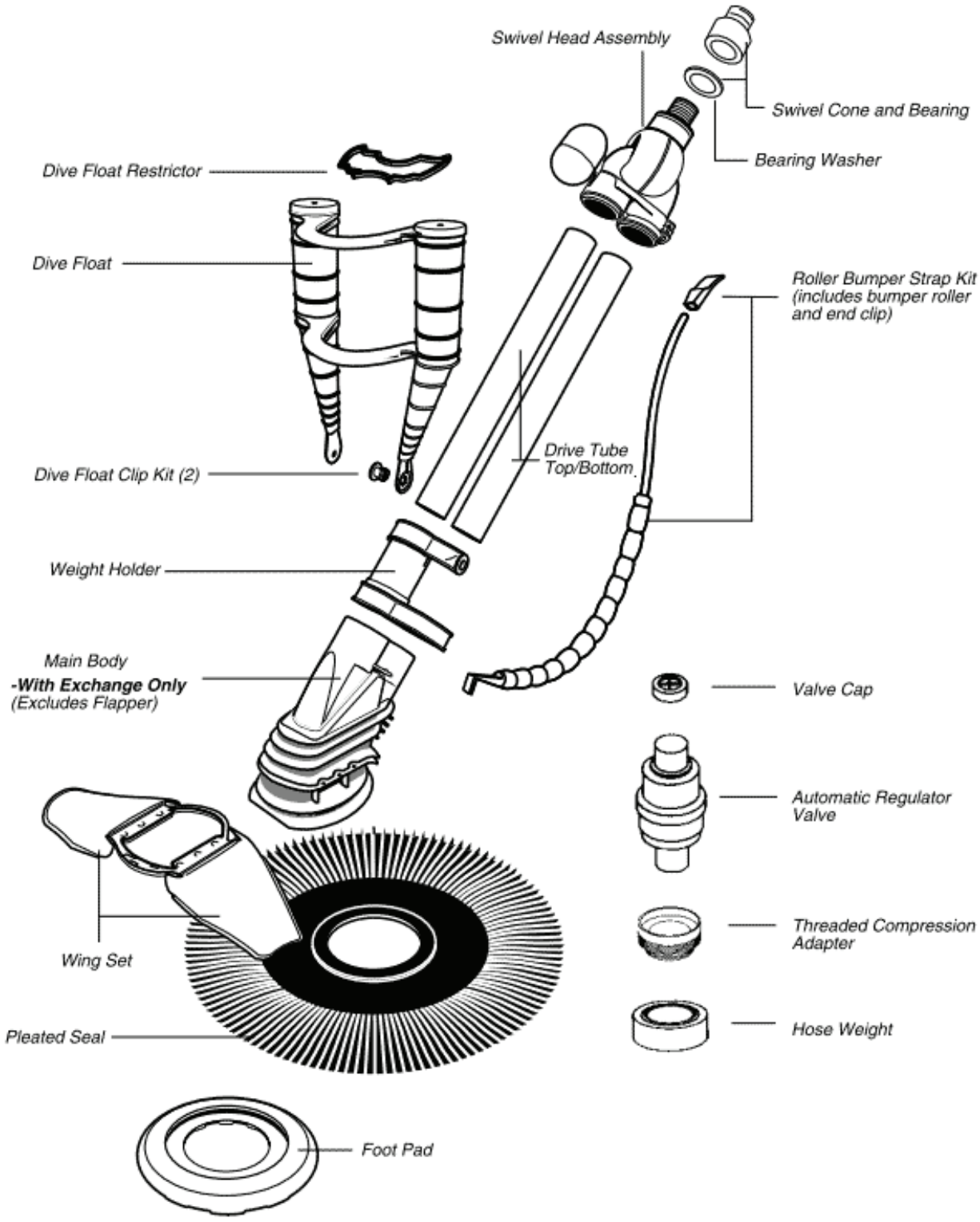

11 - Dominator Exploded view

Dominator

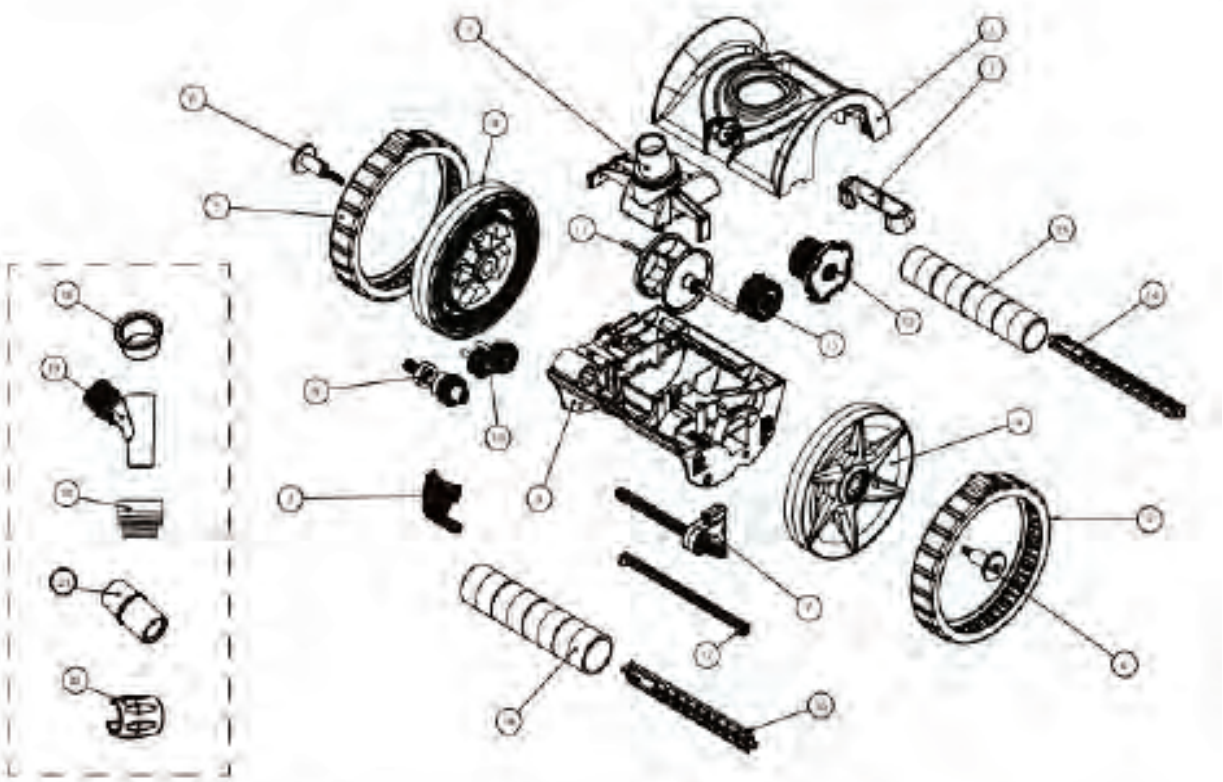

Item Number	DESCRIPTION
1	Top Cover Kit
2	Buckle Kit
3	Swivel Kit
4	Wheel Kit
5	Tire Kit
6	Wheel Hub Kit
7	Left Drive Kit
8	Right Drive Kit
9	Bottom Cover Kit
10	Drive Gear Kit
11	Turbine Kit
12	Cam Kit
13	Cam Gear Kit
14	Front Roller Kit

Item Number	DESCRIPTION
15	Rear Roller Kit
16	Roller Bar Kit
17	Wear Bar Kit
18	Valve Cap
19	Regulator Valve
20	Threaded Compression Adapter
21	Flow Gauge

12 - Dominator lite Exploded View

Dominator Lite

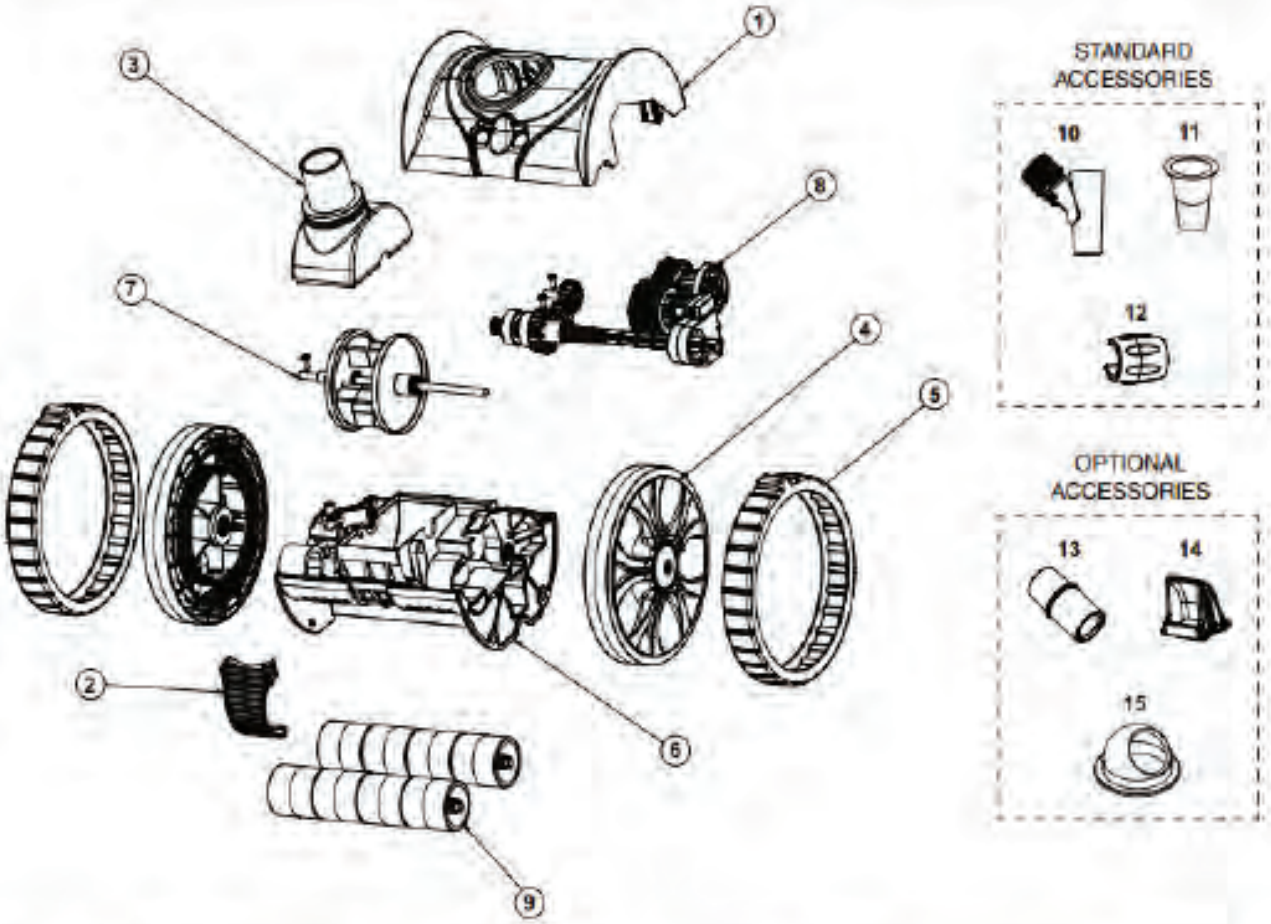

ITEM #		DESCRIPTION
1		Top Cover Kit
2		Buckle Kit
3		Swivel Kit
4		Wheel Kit
5		Tire Kit
6		Bottom Cover Kit
7		Turbine Kit
8		Drivetrain Kit
9		Roller Kit

ITEM #		DESCRIPTION
10		Regulator Valve
11		Reducer Cone
12		Hose Float
13		Flow Gauge
14		Inlet Insert Kit
15		Eyeball Diverter

13 - Kreepy Krauly Hug Bug

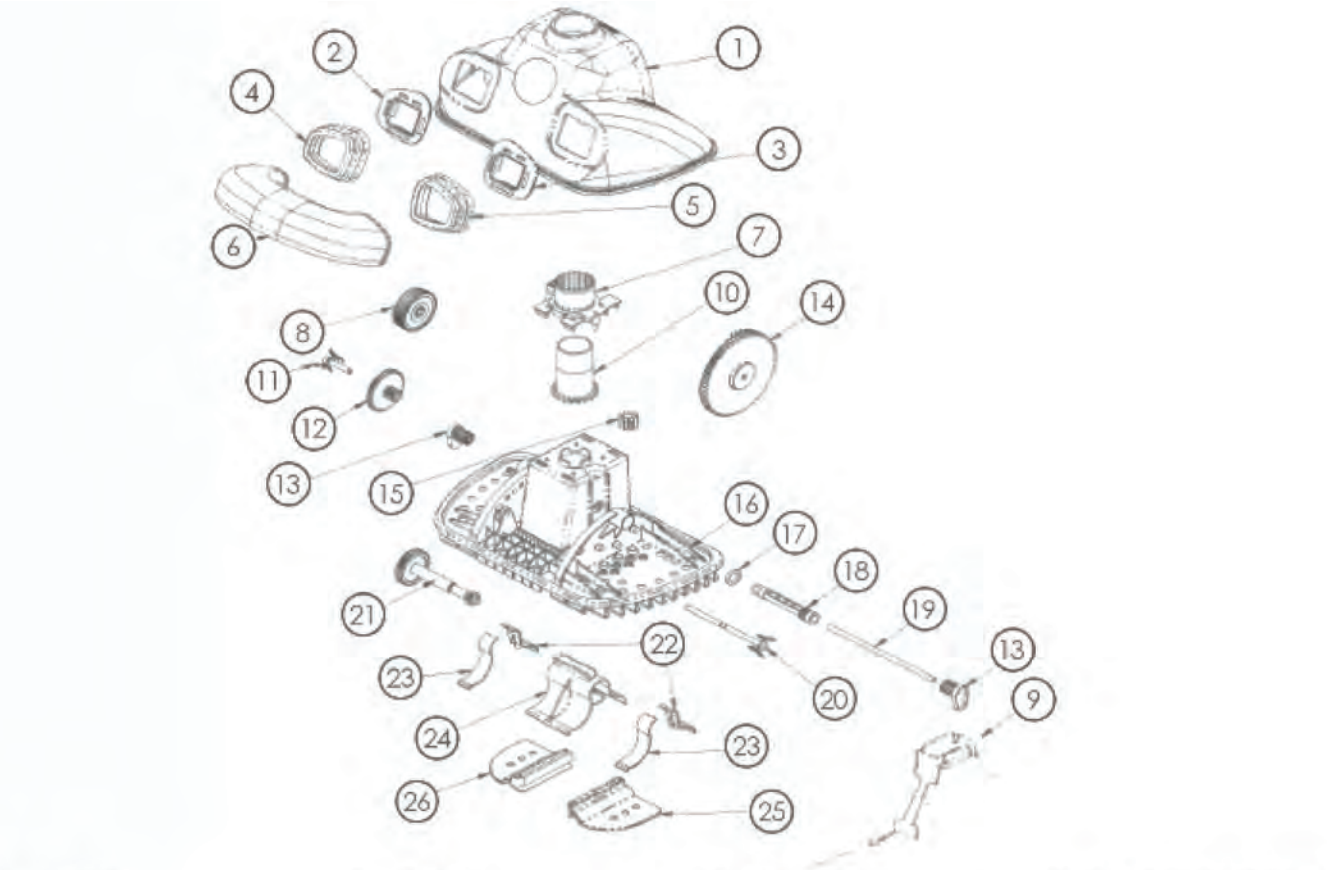

1. Hood
2. Below Clip R/H
3. Below Clip L/H
4. Below R/H
5. Below L/H
6. Elevation Limiter
7. Centre clip
8. Clutch
9. Ratchet finger
10. Gear centre
11. Shaft short
12. Drive gear short
13. Shaft plug (2)
14. Planet gear
15. Space gear
16. Housing/Shoe assembly
17. Sealing washer
18. Oscillator sleeve
19. Stainless steel shaft
20. Shaft long
21. Drive gear long
22. Sliding seal short (2)
23. Sliding seal long (2)
24. Oscillator
25. Flag large right
26. Flag large left

Flap set (27/28)

Sliding seal set (23/24)

14 - Kreepy Krauly Bull Shark

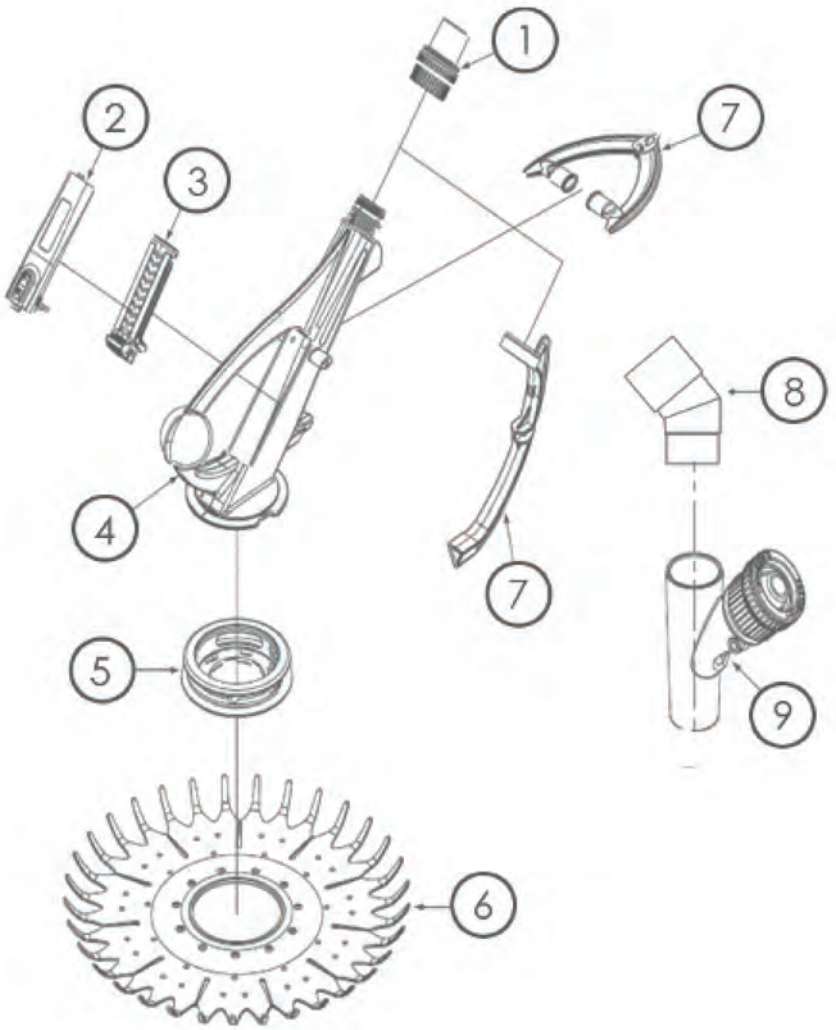

1 - Deflector whel
2 - Swivel assembly
3 - Bumper set
4 - Suction seal
5 - Footpad
6- Main body
7 - Flapper
8 - Lid and lock
9 - Weir valve - adjustable
10 - Weir adaptor
11 - Hose weight

1 - Typical Swimming Pool Layout

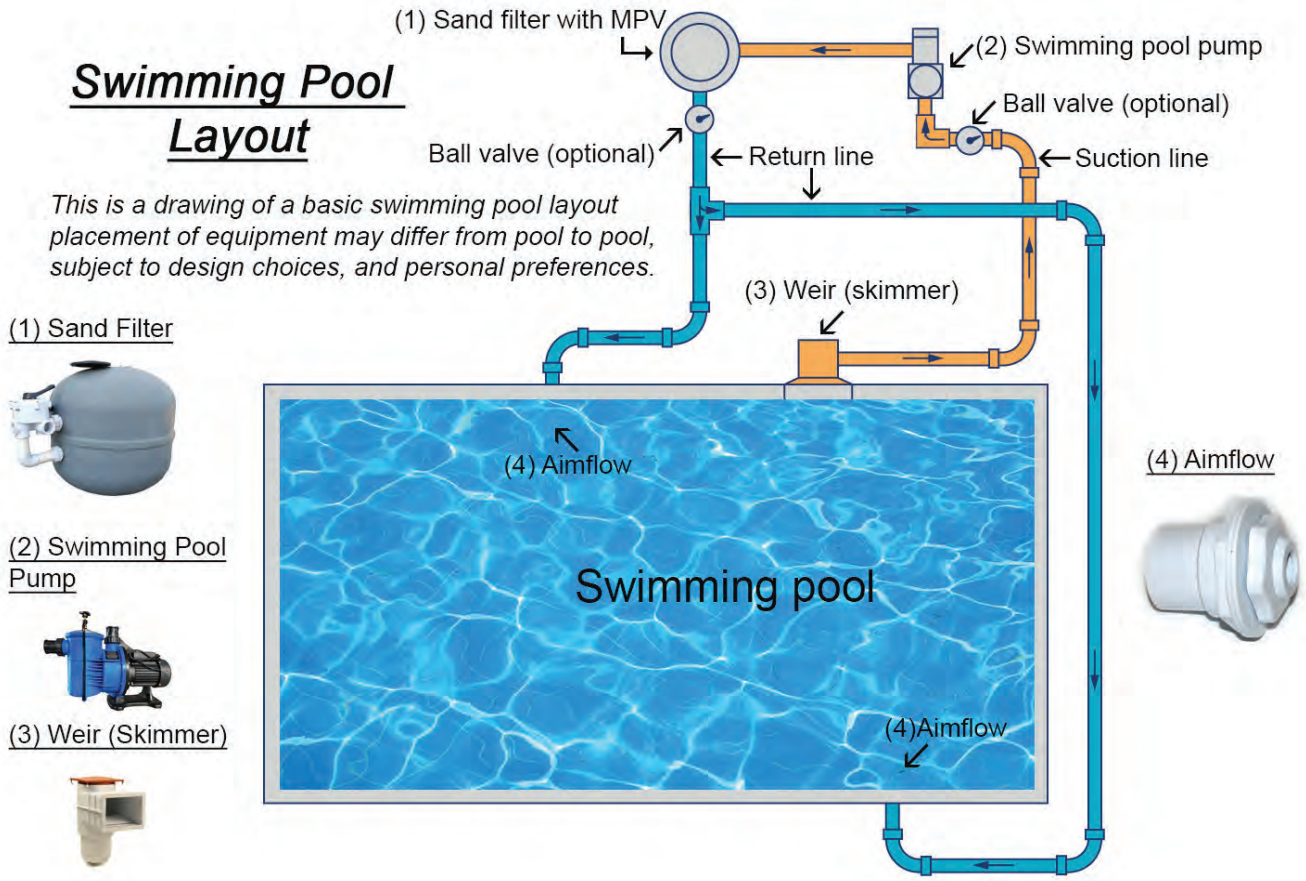

Swimming Pool Layout's (Domestic Pools)

1. All domestic swimmings pools should consist of the following components at least:-
   - a- Volume of water in some type of container IE- construction in the ground, above ground, concrete, with Marbelite, fiber glass or tile finish and/ or vinyl lining.
   - b- Piping, pool to pump (suction side), and piping from pump to pool,(return side)
   - c- Pump system consisting of a swimming pool pump, in different sizes (0.6kw and larger), and a swimming pool filter also in different sizes (1 Bag and larger), sizes of pump and filter will vary from pool to pool depending on the size and design and of the swimming pool.
   - d- Electrical box for all electrical connections, such as lights, Chlorination ect.
2. Other equipment such as weirs, aimflows and jets will be utilized to manage the flow of water in and around the the swimming pool.
3. Specialized equipment such as Chlorination, pH feeders and other units may be also installed depending the swimming pool owners personal preferences
4. The amount of each of the components installed will be, in most cases, be determined by the size and type of swimming pool being built.

2 - Universal Timer - WACO DTD-1440-1

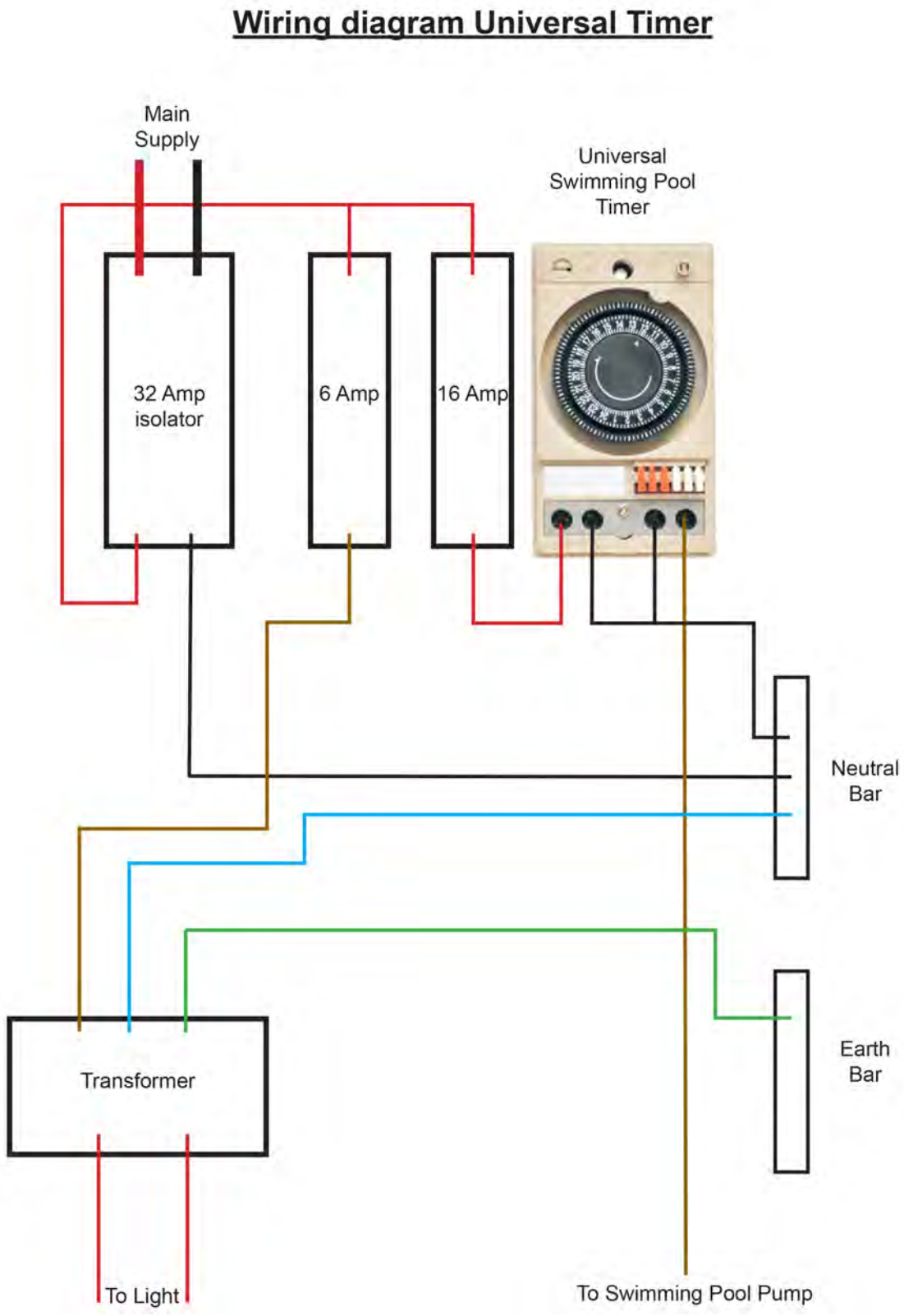

Timer Wiring Diagram

3 - Manual Timer - ACDC SLU181D

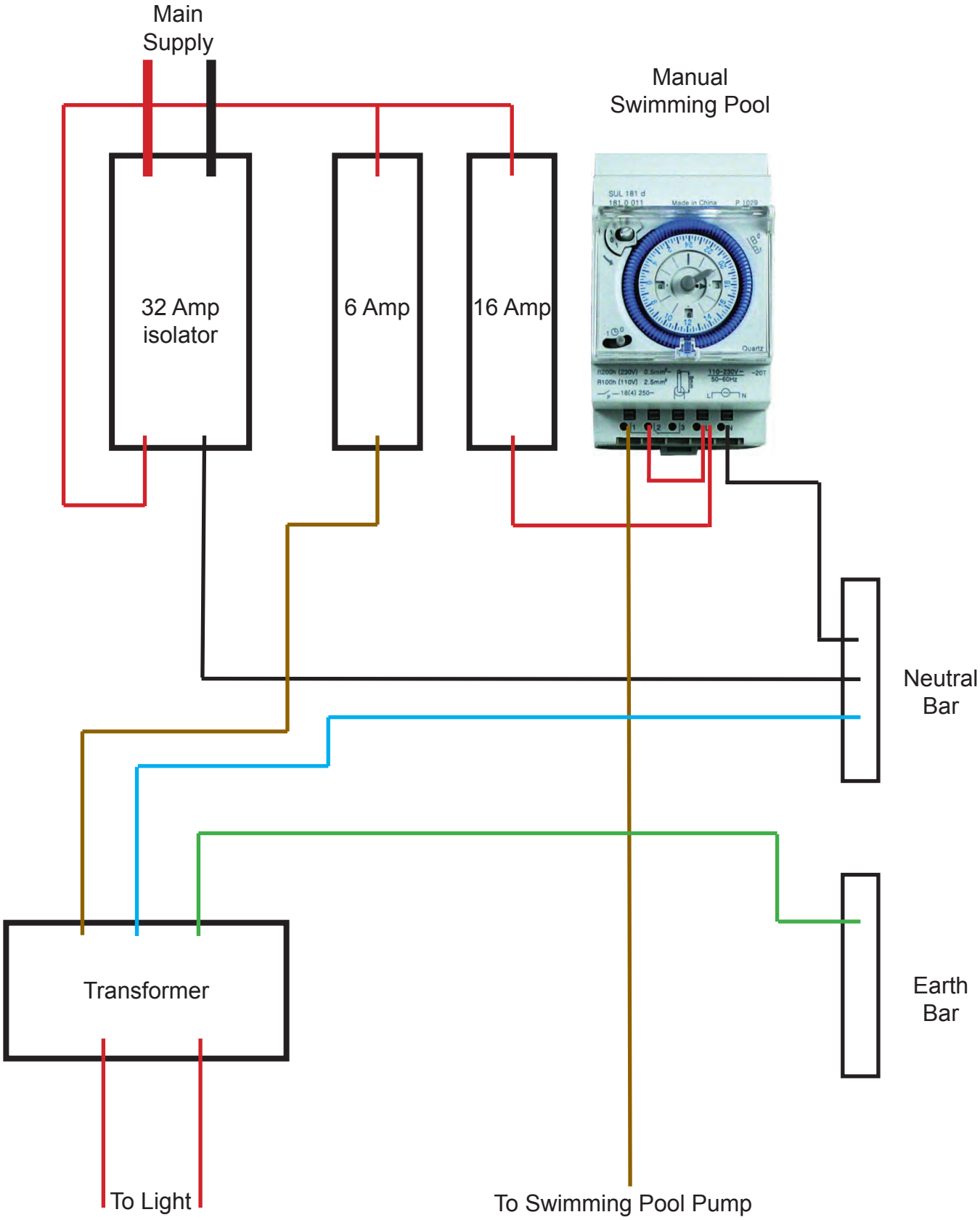

Timer Wiring Diagram

4 - Manual Timer - GRASSLIN TALENTO 111

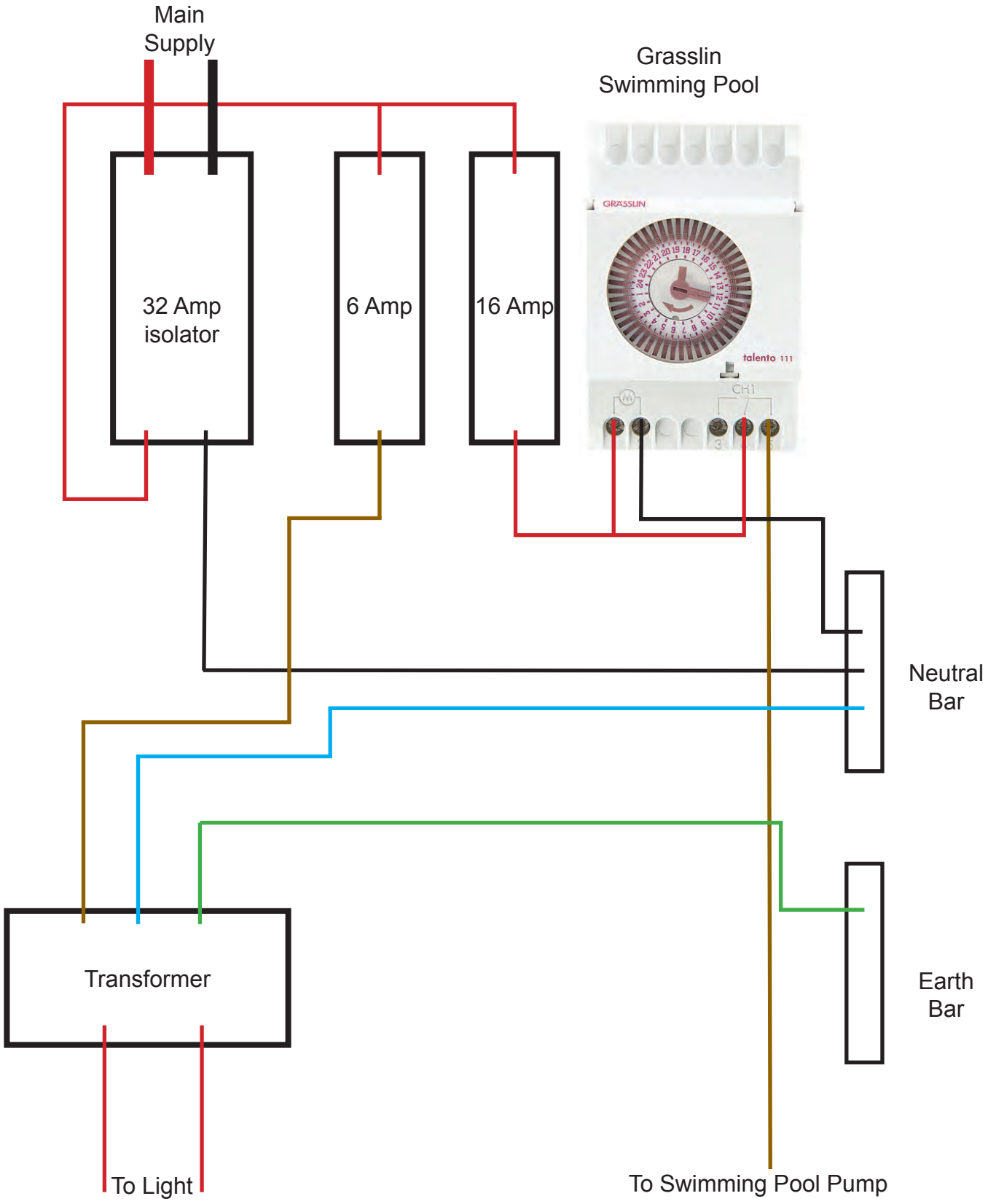

Timer Wiring Diagram

5 - Digital Timer - MCE DTS-16C 20A

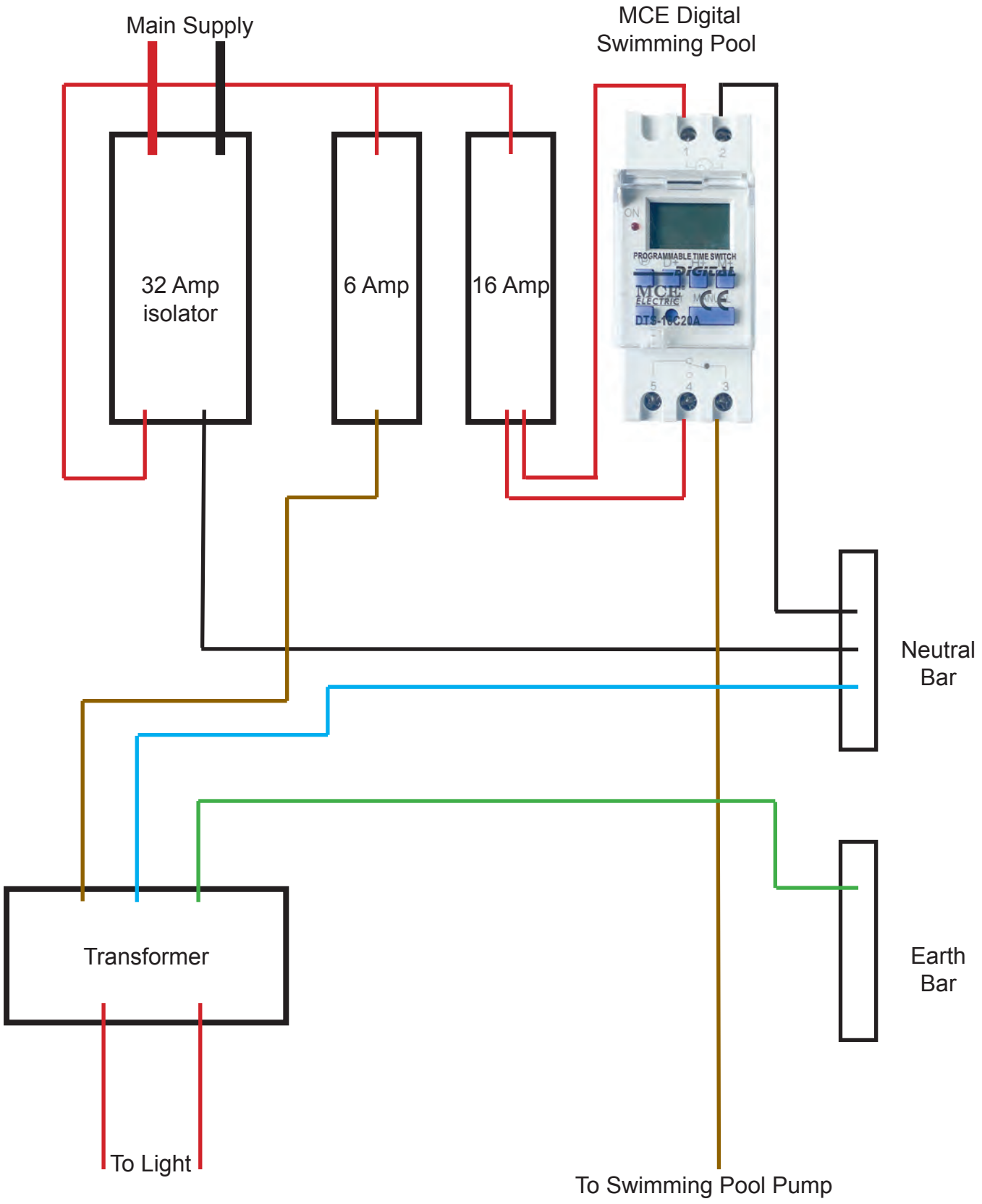

Timer Wiring Diagram

6 - Din Timer - ACDC BND-X5

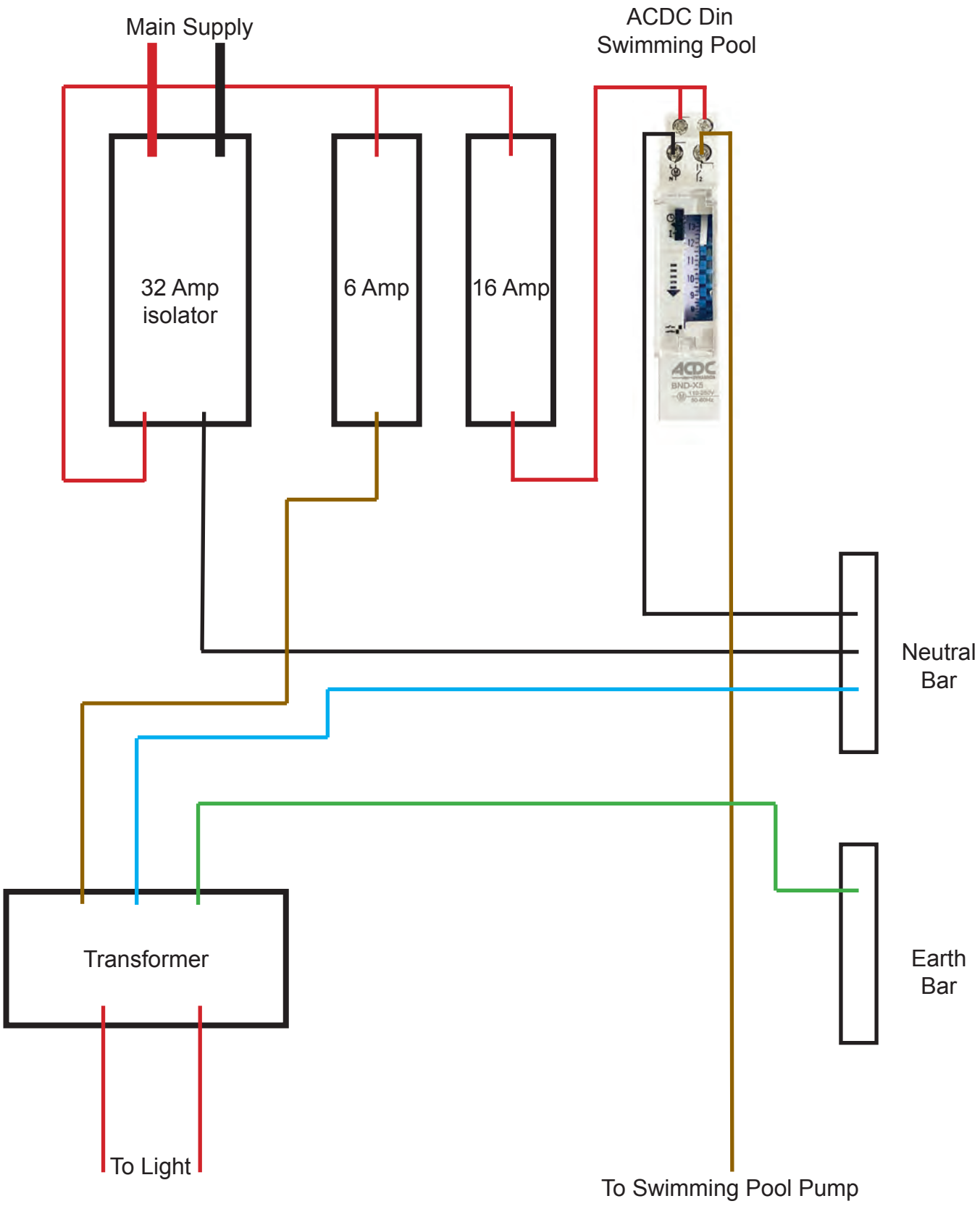

Timer Wiring Diagram

7 - Din Timer - MCE

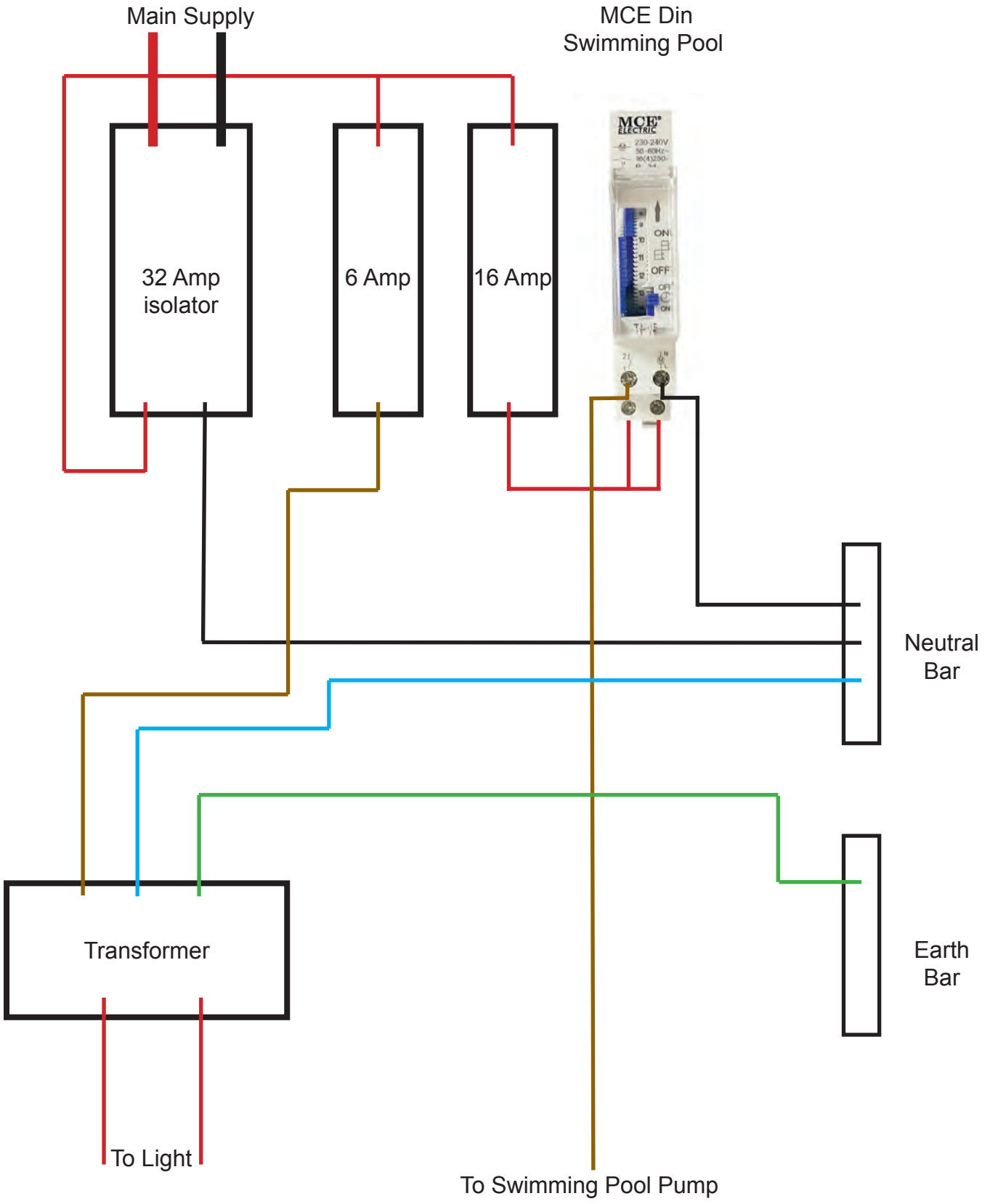

8 - Heat Pump Installation

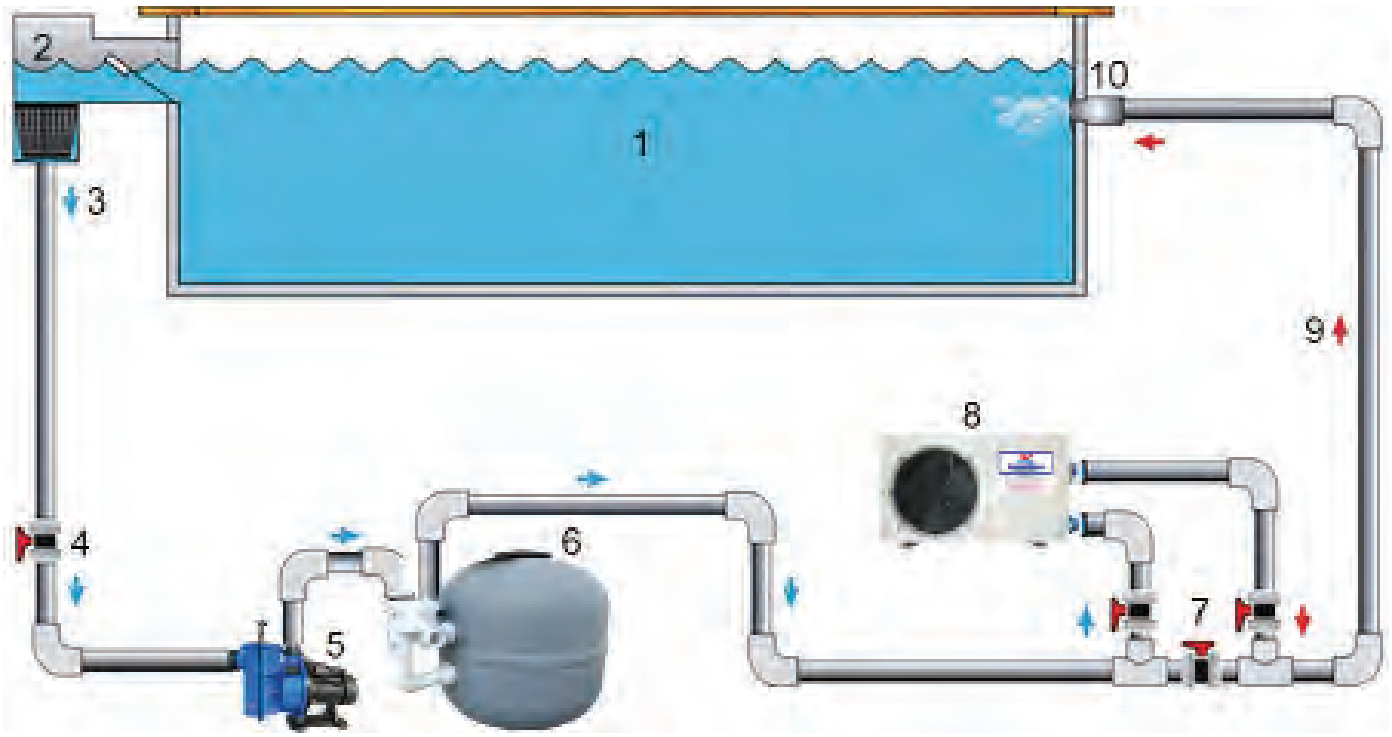

NO	DESCRIPTION
1	Swimming pool
2	Weir / Skimmer
3	Water flow direction (cold water)
4	Ball valve
5	EQ Swimming pool pump
6	EQ Swimming pool sand filter
7	Heat pump bypass system
8	Aquaking swimming pool heat pump
9	Water flow direction (heated water)
10	Water returning into pool via aimflow

AQUAKING HEAT PUMP SIZING

1	5.3KW for pools up to 35 000 lt water
2	7.8KW for pools up to 40 000 lt water
3	9.5KW for pools up to 55 000 lt water
4	11.3KW for pools up to 70 000 lt water
5	17KW for pools up to 100 000 lt water

9 - Typical Chlorinator Installation

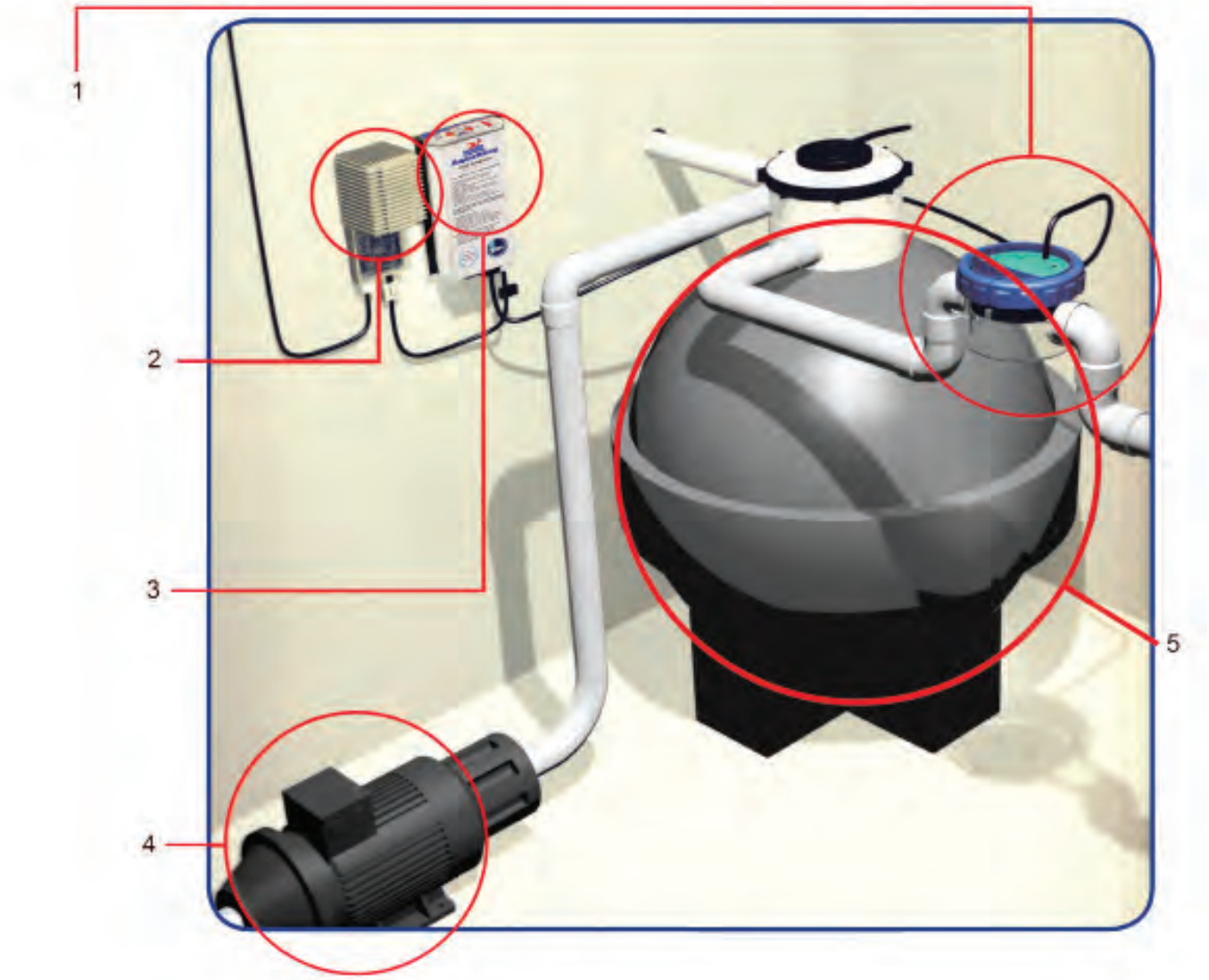

Typical Chlorinator Installation - key to photo

1. Chlorinator electrode, always installed last in line on the return line.
2. Chlorinator transformer.
3. Chlorinator power pack, with output display, where settings are controlled from.
4. Swimming pool pump.
5. Swimming pool sand filter.

10 - Typical Solar Panel installation

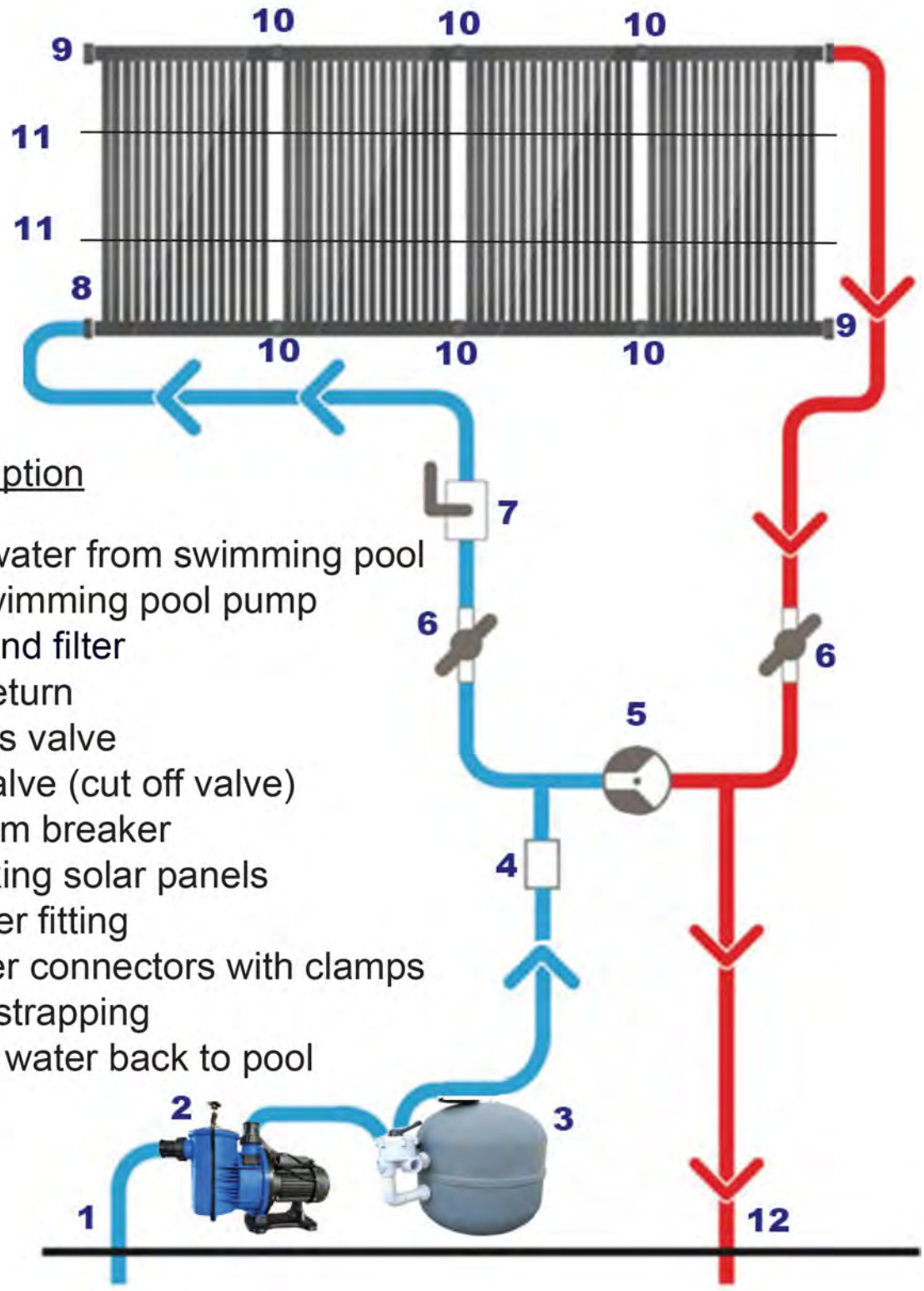

NO Description

1 Cold water from swimming pool
2 EQ swimming pool pump
3 EQ sand filter
4 Non return
5 Bypass valve
6 Ball valve (cut off valve)
7 Vacuum breaker
8 Aquaking solar panels
9 Stopper fitting
10 Rubber connectors with clamps
11 Solar strapping
12 Warm water back to pool

11 - Branches Information

Hyper Pool Equipment

HEAD OFFICE
Distribution & Retail Outlet
+(27) 51 432 4397
quotes@hyperpool.co.za

LANGENHOVENPARK
Retail Outlet
+(27) 51 446 4606
lhp@hyperpool.co.za

FLEURDAL
Retail Outlet
+(27) 51 432 4110
fhp@hyperpool.co.za

BETHLEHEM
Retail Outlet
+(27) 58 303 3407
bhm@hyperpool.co.za

WELKOM
Retail Outlet
+(27) 57 352 2134
wlk.manager@hyperpool.co.za

UMHLANGA
Distribution & Retail Outlet
+(27) 31 492 8827
durban@hyperpoolgroup.co.za
rathin@hyperpool.co.za

SILVER LAKES PRETORIA
Distribution & Retail Outlet
+(27) 12 492 0003
salespta@hyperpoolgroup.co.za
accountspta@hyperpool.co.za

Riaan Pool Equipment

HEAD OFFICE
Distribution
+(27) 16 933 5050
sales@riaanpool.co.za

JUNXION
Retail Outlet
+(27) 16 932 1062 / +(27) 16 981 5050
salesjunction@riaanpool.co.za

THREE RIVERS
Retail Outlet
+(27) 16 423 3966
sales3rivers@riaanpool.co.za

EDENVALE
Distribution & Retail Outlet
+(27) 11 609 3836
salesedenvale@riaanpool.co.za